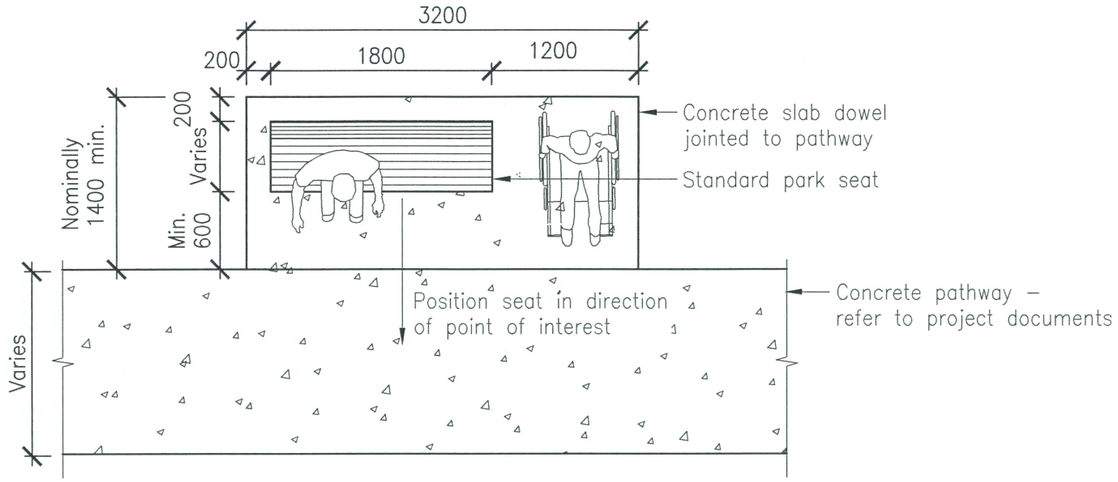

PARK SEAT ON CONCRETE SLAB

Scale N.T.S

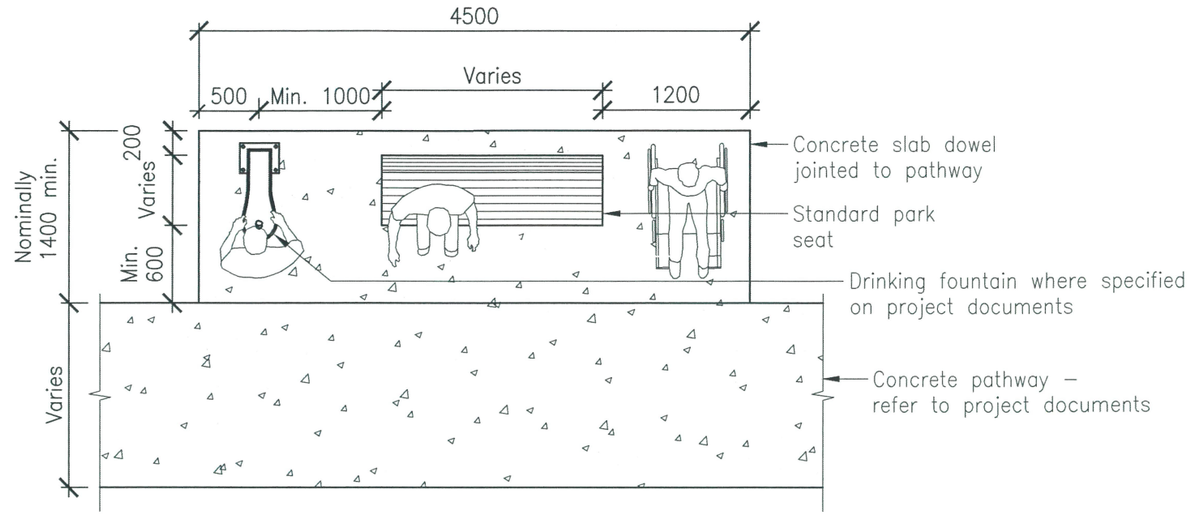

PARK SEAT & DRINKING FOUNTAIN ON CONCRETE SLAB

Scale N.T.S

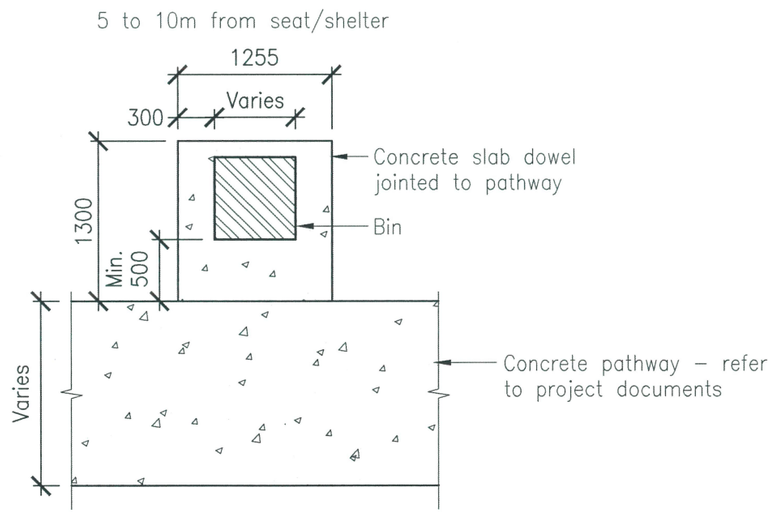

BIN OFFSET FROM PATH ON CONCRETE SLAB

Scale N.T.S

NOTES:

1. All concrete to be N32 Min (refer project documentation) in accordance with AS 1379 and AS 3600.
2. All dimensions are in millimetres.
3. Refer to IPWEA dwg RS-065 for dowel joint details and pavement detailing.

REVISIONS		INIT	DATE
E			
D			
C			
B			
A			
X	ORIGINAL ISSUE	VC	07/16

SCALES	Drawn	VC	Date	07/16
N.T.S	Coordinator	WM	Date	07/16

AUTHORISED

14/07/16

Manager Integrated Transport Planning & Design
RPEQ 6872

PARK FURNITURE SETOUT - SHEET 1 OF 2

Moreton Bay Regional Council

DRG No. **PN-6600**

ORIGINAL SIZE A3

REVISION

File name: I:\User_Group\Design_Services\# Projects\MBRC Standard Drawings\New MBRC Standard Drawings\14 – Parks and Natural Areas\PN-6600 – Park Furniture Setout – Sheet 1 of 2.dwg Date: Jul 13, 2016 – 11:12am