PINE RIVERS SHIRE COUNCIL

STANDARD DRAWINGS

8-50000 Series
SEWERAGE WORKS

DRAWING	AMEND	DESCRIPTION	DATE
GENERAL			
8-50001	A	Sample As Constructed	04/2001
8-50002	B	Sewer Manhole Type 1 - 1100 dia. and Step Irons	11/2004
8-50003	C	Sewer Manhole Type 2 - 1500 dia.	02/2005
8-50004	C	Precast Concrete Manhole - 1050 dia.	02/2005
8-50006	B	Details of Inlets and Outlets	02/2001
8-50007	-	Sewer Manhole Covers and Frames	05/1997
8-50008	A	Pipeline Construction - Typical Trench Details	02/2005
8-50009	C	House Connection Branches	02/2005
8-50010	A	Standard Reinforcement Details	02/2005
SEWAGE PUMPING STATIONS AND RISING MAINS			
8-50015	A	General Arrangement - 2000 dia.	02/2001
8-50016	-	Reinforcement - 2000 dia.	05/1997
8-50017	A	Backflow Prevention Device	02/2001
8-50018	A	Sewage Overflow Arrangement	02/2005
8-50019	A	Air Release	02/2005
8-50020	-	Probac Tank and Pump	04/2000
8-50021	A	Amenities Building Pumping Station	02/2005
8-50023	-	Pump Selection Curves	05/1997
8-50024	-	Design Information	05/1997
8-50025	-	As Constructed Details	05/1997
8-50026	-	Pressure Main Discharge Manhole	02/2001

DRAWING	AMEND	DESCRIPTION	DATE
8-50027	A	Sewer Valve Installation Details	02/2005
8-50028	-	Rising Main Scour Discharge Detail	02/2001
8-50029	A	Rising Main Manual Air Release Vent Connection Details	02/2005
FABRICATED METALWORK			
8-50040	-	Aluminium Handrails	02/2001
8-50041	-	Aluminium Ladders	02/2001
8-50042	-	Fabricated Metalwork Sheet 1 of 2	02/2001
8-50043	-	Fabricated Metalwork Sheet 2 of 2	02/2001
VENT POLES			
8-50050	A	7.2m - On Station Installation	02/2005
8-50051	A	7.2m - Remote Installation	02/2005
8-50052	A	12.0m - On Station Installation	02/2005
8-50053	A	12.0m - Remote Installation	02/2005
TRADE WASTE			
8-50080	-	Venting Details – Interceptor Traps and Holding Tanks	12/2004
8-50081	-	Mica Flap Vent and Box Detail	12/2004
ELECTRICAL SWITCHBOARDS			
8-50100	D	22kW Switchboard - Schematic Wiring Diagram	02/2005
8-50101	D	22kW Switchboard - Equipment Schedule	02/2005
8-50102	D	22kW Switchboard - Construction Requirements	02/2005
8-50103	C	22kW Switchboard - Cubicle Construction Details	02/2005
8-50110	A	22-50kW Switchboard - Schematic Wiring Diagram	02/2005
8-50111	A	22-50kW Switchboard - Equipment Schedule	02/2005
8-50112	A	22-50kW Switchboard - Cubicle Construction Schedule	02/2005
8-50113	A	22-50kW Switchboard - Cubicle Construction Details	02/2005
8-50120	A	50kW & Up Switchboard - Pump 1 Wiring Diagram	02/2005
8-50121	A	50kW & Up Switchboard - Equipment Schedule	02/2005
8-50122	A	50kW & Up Switchboard - Cubicle Construction Schedule	02/2005
8-50123	A	50kW & Up Switchboard - Cubicle Construction Details	02/2005
8-50124	-	50kW & Up Switchboard - Pump 2 Wiring Diagram	02/2005
8-50125	-	50kW & Up Switchboard – Disconnection Box Details	02/2001

DRAWING	AMEND	DESCRIPTION	DATE
ELECTRICAL MISCELLANEOUS			
8-50140	A	Electrical Conduit Pit - Types 1 and 2	02/2005
8-50141	-	Disconnecter Box and Base	05/1997
8-50144	-	Optional Vent Fan / Flow Meter Installation - Schematic Wiring Diagram	02/2005
8-50147	-	Optional Compressor Installation - Schematic Wiring Diagram	02/2005
8-50153	-	Standard Pump Station Installation - Radio Telemetry Equipment Layout	02/2005
VARIABLE FREQUENCY DRIVES			
8-50170	-	50kW & Up Variable Frequency Drive - Schematic Wiring Diagram	02/2005
8-50171	-	50kW & Up Variable Frequency Drive - Schematic Wiring Diagram	02/2005
8-50172	-	50kW & Up Variable Frequency Drive - Vent Fan Wiring Diagram	02/2005
8-50173	-	50kW & Up Variable Frequency Drive - Equipment Schedule	02/2005
8-50174	-	50kW & Up Variable Frequency Drive - Switchboard Layout	02/2005
8-50175	-	50kW & Up Variable Frequency Drive - Switchboard Sectional Views	02/2005
8-50176	-	50kW & Up Variable Frequency Drive - Disconnection Box Details	02/2005
8-50177	-	50kW & Up Variable Frequency Drive - Switchboard Room Layout	02/2005

CONTRACT CAD DRAWINGS – TO BE COMMPLETED WITH DESIGNS AND AS CONSTRUCTED DATA

CS 8-50015	A	General Arrangement - 2000 dia.	02/2001
CS 8-50024	-	Design Information	05/1997
CS 8-50025	-	As Constructed Details	05/1997

PRESENTATION STANDARDS

	MANHOLE INFORMATION	
MH 4/2 4/E	Sewer Manhole – Line No./Manhole No. End of Sewer (No Manhole) – Line No./End	Height – 5.0 Thick. – 0.7 Incline – 90°
SL 6.69 EXIST.	Level of Manhole Cover Denotes an Existing Manhole	Height – 3.5 Thick. – 0.5 Incline – 90°
	LINE INFORMATION	
6.04	Invert Level of pipe at Manhole, or End, or Outlet – To TWO Decimal Places	Height – 3.5 Thick. – 0.5 Incline – 90°
22.5° BEND CH 425.1	Bend (or Deflection) on Rising Main Chainage of Bend or Level Information along the Sewer from the D/S end.	
5.8	Length of Line – From Centre of MH To ONE Decimal Place	Height – 3.5 Thick. – 0.5 Incline – 75°
225ø RM 100ø	Diameter of Pipeline Denotes Rising Main and Diameter	
	ALLOTMENT INFORMATION	
100 INLET OB 1.8 L 3.8 SL 7.12 IL 6.50 T 3.0 ALIGN 21.2	Diameter of Inlet Branch into a MH Distance from D/S MH to Branch along the Line Length of Branch Surface Level of Ground over End of Branch Invert Level of End of Branch Pipe Distance from End of Branch to Property Corner Distance from D/S MH to Property Boundary (Note – Levels to TWO Decimal Places and Distances or Lengths to ONE Decimal Place)	Height – 3.0 Thick. – 0.35 Incline – 90°
45	New Lot Number	Height – 4.5 Thick. – 0.5 Incline – 75°
32	Existing Lots Numbers – (Thick – 0.35)	
	LINEWORK	
●	New Sewer Manhole	Radius – 1.8
○	Existing Sewer Manhole	Thick. – 0.5
———	New Sewer Line – Continuous Line	Thick. – 1.0
— — —	New Trunk Sewer (>150ø) – Long Dash and Two Short Dashes	Thick. – 1.0
—➡—	New Sewer Rising Main – Medium Broken Line	Thick. – 1.0
— —	Existing Sewer Line – Medium Broken Line	Thick. – 0.5
— —	Exist. Property Boundary – Long Broken Line Easement Boundary – Short Broken Line New Property Boundary – Continuous Line	Thick. – 0.35
—13—	Contours – 1m Intervals – Continuous Line (Provided sufficient contours are available to show the lie of the land.)	Height – 2.0 Thick. – 0.25 Incline – 75°
—2.7—	Dimensions	Height – 2.5 Thick. – 0.35 Incline – 90°
—T—	Tie Lines – Very Short Dashed Lines	Height – 2.5 Thick. – 0.25 Incline – 90°
AMAROO	Approved Road Names	Height – 5.0 Thick. – 0.7 Incline – 90°
Stage Bdy	Stage Boundary – Long Dashed Line	Thick – 1.0

GENERAL NOTES

1. Plans are to be drawn at 1:500 Scale on approved media.
2. Pipe Material and Class is to be noted on the plan.
3. Diameters to be shown for all house connections into Manholes. All other Y–Branches accepted as 100ø. Branches constructed greater than this are to have their size noted on the Plan.
4. Levels are to be on Australian Height Datum. Origin of Level information is to be shown on the Plan.
5. Approved Road Names are to be shown on the Plan.
6. Lot Numbers are to be provided as per the Registered Plans for the Estate.
7. All printing is to be presented so as to be read from the bottom, or right edges of the sheet.
8. Text, Linework, and general Plan Presentation is to be of a Professional Quality and suitable for Microfilming.

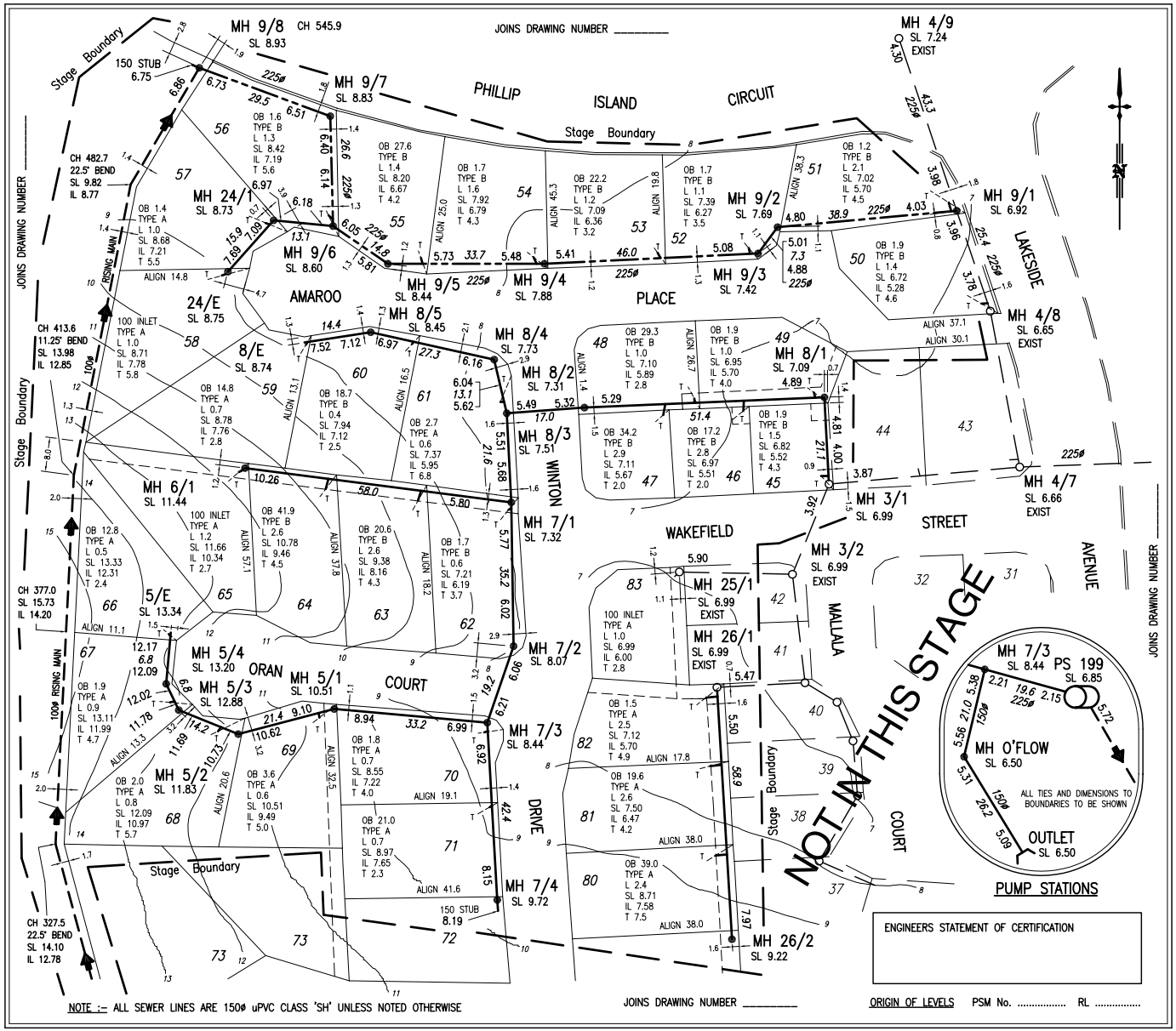

PLAN SAMPLE

A	M'hole Info and Rising Main changed	4/01	
	Original Issue	11/96	
	Revisions	Apd.	Date

Scales: 0 10 20 m — 1:500 BEFORE REDUCTION

Mayor

Chief Executive Officer

Date .....

Director Works & Services

Drawn	T.T.	Traced	
Checked	L.Mc.	Recomm.	F.J.K
Approved		F. Bk.	
Level Datum			

PINE RIVERS SHIRE COUNCIL

SAMPLE SEWERAGE AS CONSTRUCTED PLAN

File No. 400/26
Min Page 01/1303
Reference Drawings

Drawing No. 8 50001 A

Sheet 1 of 1 Sheets

PINE RIVERS

A1

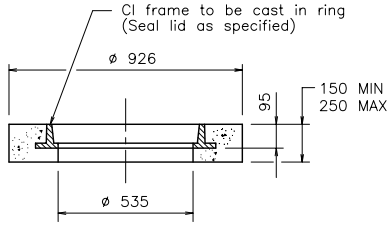

SECTIONAL ELEVATION
CONCRETE RING

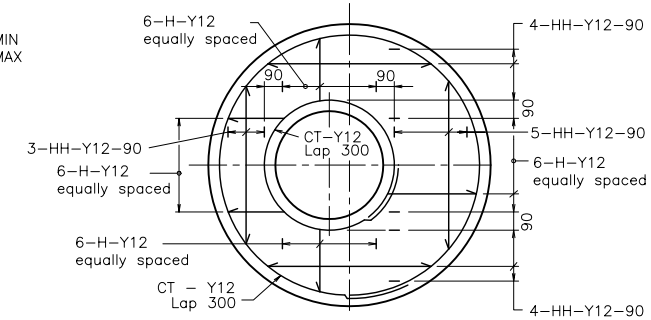

PLAN

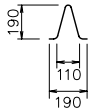

RING TIE
DETAIL

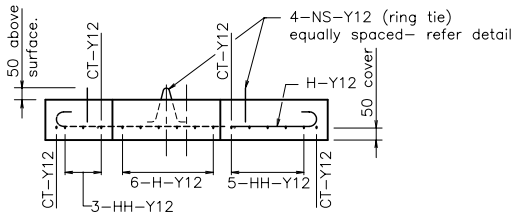

SECTIONAL ELEVATION
TOP SLAB REINFORCEMENT

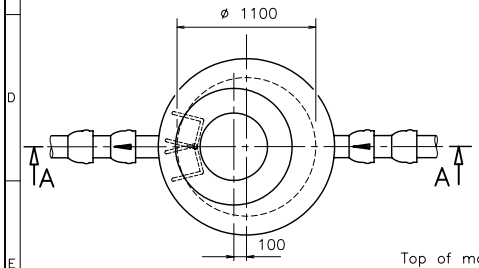

PLAN

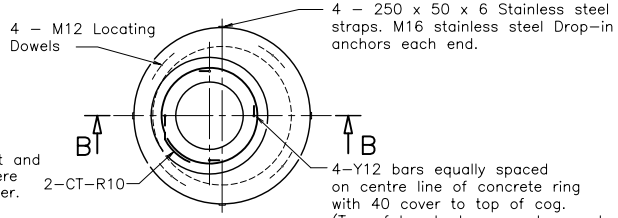

PLAN

Top of manhole ring to be 100 above natural surface in private property, 600 above natural surface in unmaintained areas (i.e. scrub), 25 above natural surface in verge areas, flush with pavement and footpaths, above flood levels on creeks where possible, or as directed by Council's Engineer.

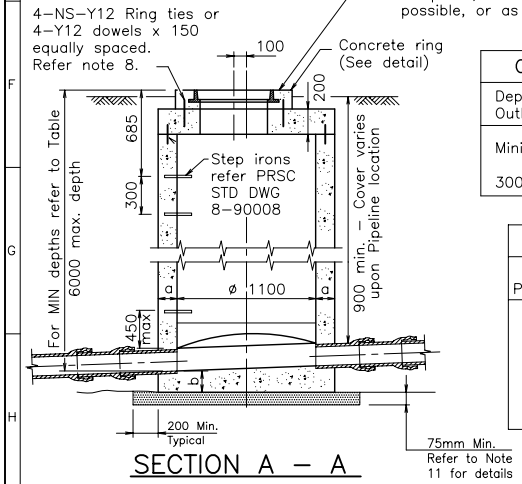

SECTION A – A

CONCRETE THICKNESS		
Depth to Outlet Invert	'a'	'b'
Minimum to 3000	150	150
3000 to 6000	225	300

MINIMUM DEPTHS	
Outlet Pipe Size	Minimum Depth to Outlet Invert
ø150	1100
ø225	1175
ø300	1250
ø375	1325

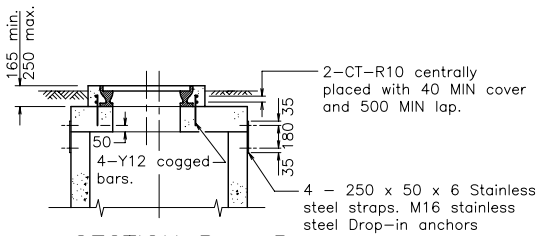

SECTION B – B
BOLT DOWN COVER

NOTE Dowels and top slab reinforcement not shown in this view.

NOTES– Manholes

1. Minimum fall through manholes shall be 40mm.
2. Concrete shall be Class N32 in accordance with AS 1379. Concrete shall be compacted by mechanical vibration. Cold joints in walls (including raising of manholes) shall be scabbled and incorporate 8 No. ø12 x 600 long galvanised dowels equally spaced, centrally located within the wall with a minimum penetration of 300mm each side of joint.
3. All fasteners excluding nuts shall be Grade 316 stainless steel. Nuts shall be Grade 304 stainless steel. Unless otherwise noted, fasteners shall be as described below.
   (a) Fixing to concrete – bolts shall be M16 Drop–in anchors. (Ramset Dynaset or similar)
   (b) Fixing to metalwork – bolts shall be M16 HEX head bolts.
4. Anti–galling lubricant "Loctite 222 or 567" or similar shall be used on all threads and between all stainless steel abutting surfaces
5. uPVC or GRP pipes cast into manhole walls shall be coated or sanded for the length of wall penetration to ensure bonding.
6. Refer to Standard Drawing 8–50006 for Inlet and Outlet details
7. Taper top manholes are not to be used except where approved by Council's Engineer.
8. Precast manhole top slabs are to be supplied with four (4) factory installed ring ties. Alternative ring tie details or dowel bars may be accepted, subject to approval from Council's Engineer.
9. Approved sealants, sealing rings and waterstop materials shall be placed in joints between the manhole top and wall, wall sections, pipe connections into manholes to ensure the chamber is watertight and will pass the vacuum test.
10. Sewerage systems are to be vacuum tested in accordance with Pine Rivers Shire Council Specifications.
11. 75mm min. compacted bedding sand shall be compacted to a Density Index of not less than 65 measured in accordance with AS 1289.

NOTES– Step Irons

12. Step Irons to be in accordance with PRSC STD DWG 8–90008.

Revisions	Appd	Date
B Step iron detail removed, Note 12 amended, 13 deleted		11/04
A Notes added, Note numbering changed		04/01
Original Issue		09/96

Mayor _____
C.E.O. _____
Date _____

Director Assets & Infrastructure
Drawn | T.T. | Rec.
Checked | L.Mc. | Approved
Disc.

Pine Rivers Shire Council
220 Gympie Road
Strathpine
PO Box 5070
Queensland 4500

PINE RIVERS

SEWER MANHOLE TYPE 1
1100mm DIAMETER
& STEP IRONS

File No. 400/26
Min Page
Standard Drawing No.
8 | 50002 | B A

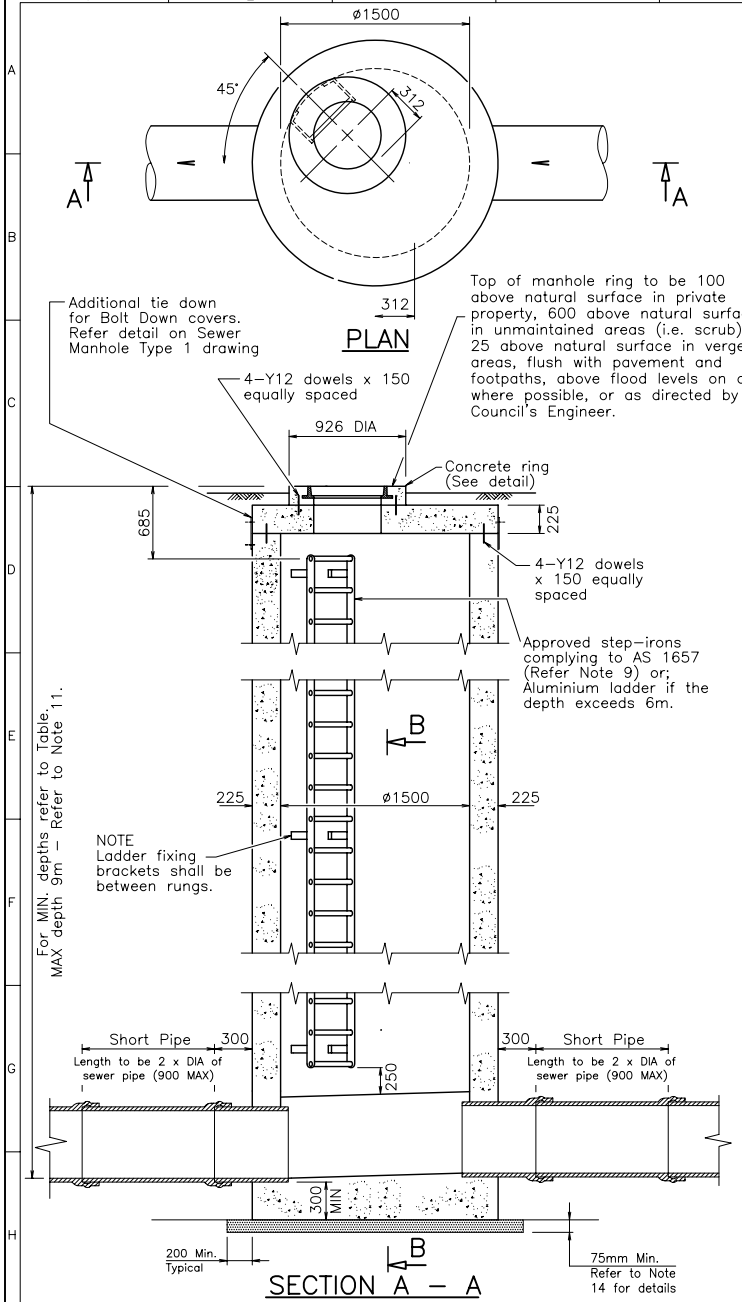

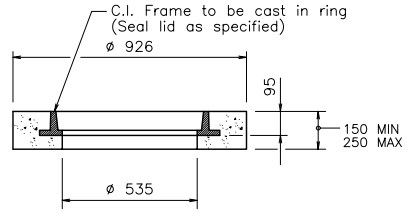

SECTIONAL ELEVATION
CONCRETE RING

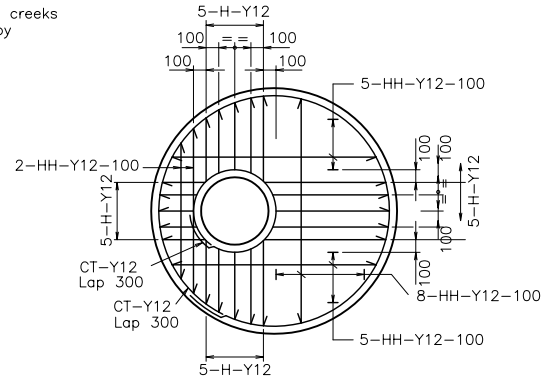

PLAN

NOTES

1. Minimum fall through manholes shall be 40mm.
2. Concrete shall be Class N32 in accordance with AS 1379. Concrete shall be compacted by mechanical vibration. Cold joints (including raising of manholes) shall be scabbled and incorporate 8 No. ø12 x 600 long galvanised dowels equally spaced, centrally located within the wall, with a minimum penetration of 300mm each side of joint.
3. All fasteners excluding nuts shall be Grade 316 stainless steel. Nuts shall be Grade 304 stainless steel. Unless otherwise noted, fasteners shall be as described below.
   (a) Fixing to concrete – bolts shall be M16 Drop–in anchors. (Ramset Dynaset or similar)
   (b) Fixing to metalwork – bolts shall be M16 HEX head bolts.
4. Nylon or polythene separation inserts shall be used between stainless steel fasteners and aluminium sections.
5. Anti–galling lubricant "Loctite 222 or 567" or similar shall be used on all threads and between all stainless steel abutting surfaces.
6. uPVC or GRP pipes cast into manhole walls shall be coated or sanded for the length of wall penetration to ensure bonding.
7. Unless noted otherwise angles, bars and tubes shall be aluminium alloy 6061 T6.
8. Provide 2 No. safety bars at 300 centres for outlet pipes larger than ø600.
9. MANHOLE ACCESS
   (a) Step–irons– refer to Standard Drawing 8–90008 for details, or
   (b) Ladder constructed from Grade 6061–T6 aluminium. Ladders and step–irons shall comply with AS 1657
   (c) Ladders and step irons are not provided on trunk sewers ⩾ø450
10. Refer Standard Drawing 8–50006 for Inlet and Outlet details.
11. Manholes exceeding 9m deep require approval from Council's Engineer; and require structural design, and checking for floatation.
12. Approved sealants, sealing rings and waterstop materials shall be placed in joints between the manhole top and wall, wall sections, pipe connections into manholes to ensure the chamber is watertight and will pass the vacuum test.
13. Sewerage systems are to be vacuum tested in accordance with Pine Rivers Shire Council Specifications.
14. 75mm min. bedding sand shall be compacted to a Density Index of not less than 65 measured in accordance with AS 1289.

MINIMUM DEPTHS	
Outlet Pipe Size	Minimum Depth to Outlet Invert
ø150 – ø375	Use Type 1 manhole
⩾ ø450	Sewer Dia. + 1000

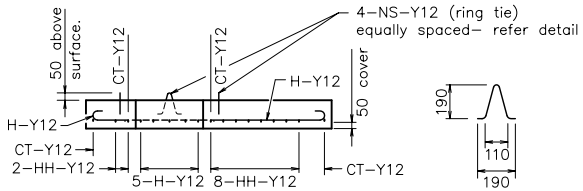

SECTIONAL ELEVATION
TOP SLAB REINFORCEMENT

RING TIE
DETAIL

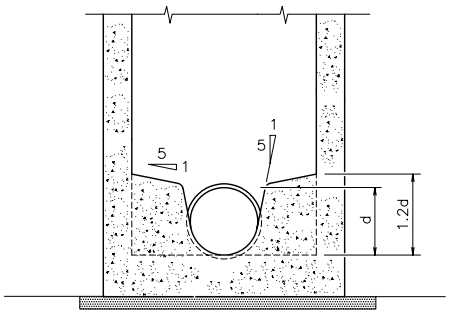

SECTION B – B

Revisions	Appd	Date
C Note 9 amended		2/05
B Notes 12 & 13 added		04/01
A Section A–A amended.		06/97
Original Issue		09/96

Mayor _____
C.E.O. _____
Date _____

Director Assets & Infrastructure
Drawn T.T. Rec.
Checked L.Mc. Approved
Disc.

Pine Rivers Shire Council
220 Gympie Road
Strathpine
PO Box 5070
Queensland 4500

PINE RIVERS

SEWER MANHOLE TYPE 2
1500mm DIAMETER

File No. 400/26
Min Page
Standard Drawing No.
8 50003
C B A

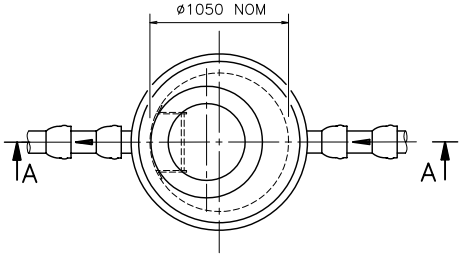

PLAN

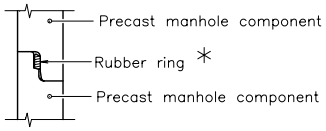

DETAIL B

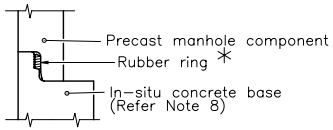

DETAIL A

* = precast manholes from manufacturers employing bitumen rings or two pack epoxy such as PHEROPI are also permitted.

CONCRETE THICKNESS		
Depth to Outlet Invert	'a'	'b'
Minimum to 3000	150	150
3000 to 6000	225	300

MINIMUM DEPTHS	
Outlet Pipe Size	Minimum Depth to Outlet Invert
ø150	1100
ø225	1175
ø300	1250
ø375	1325

NOTES

1. Minimum fall through manholes shall be 40mm.
2. Concrete shall be
   (a) Class N32 for in-situ concrete
   (b) Class N40 for pre-cast segments
   both in accordance with AS 1379
   In-situ concrete shall be compacted by mechanical vibration. Cold joints in walls shall not be permitted. Base and walls to be cast monolithically.
3. All fasteners excluding nuts shall be Grade 316 stainless steel. Nuts shall be Grade 304 stainless steel.
   Unless otherwise noted, fasteners shall be as described below.
   (a) Fixing to concrete – bolts shall be M16 Drop-in anchors. (Ramset Dynaset or similar)
   (b) Fixing to metalwork – bolts shall be M16 HEX head bolts.
4. Nylon or polythene separation inserts shall be used between stainless steel fasteners and aluminium sections.
5. Anti-galling lubricant "Loctite 222 or 567" or similar shall be used on all threads and between all stainless steel abutting surfaces.
6. uPVC or GRP pipes cast into manhole walls shall be coated or sanded for the length of wall penetration to ensure bonding.
7. Precast manholes shall not be used where :-
   (a) sewer lines accept pumped flows
   (b) sewer lines are greater than ø375
   (c) manholes are greater than 6.0m in depth
   (d) saturated ground conditions are likely.
   (e) erosion of creek banks is likely.
8. Top of in-situ base shall be profiled to suit the incoming manhole component.
9. MANHOLE ACCESS
   (a) Ladders shall comply with AS 1657 and be fabricated from Grade 6061-T6 aluminium. Refer Standard Drawing 8-50041.
   (b) Step Irons complying with AS 1657 and Standard Drawing may be 8-90008 may be used but must be installed by the manufacturer during casting. Step irons may not be installed subsequent to the casting process.
10. Taper top Manholes are not to be used except where approved by Council's Engineer
11. Approved sealants, sealing rings and waterstop materials shall be placed in joints between the manhole top and wall, wall sections, pipe connections into manholes to ensure the chamber is watertight and will pass the vacuum test.
12. Sewerage systems are to be vacuum tested in accordance with Pine Rivers Shire Council Specifications.
13. 75mm min. bedding sand shall be compacted to a Density Index of not less than 65 measured in accordance with AS 1289.

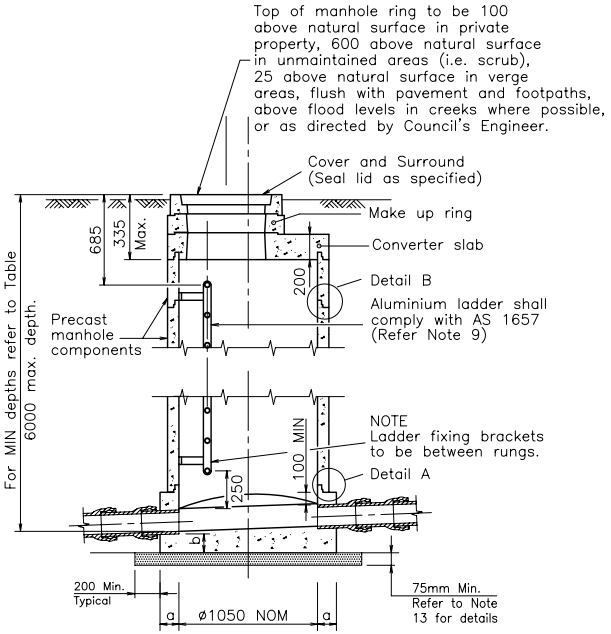

SECTION A – A
INLET TYPE A

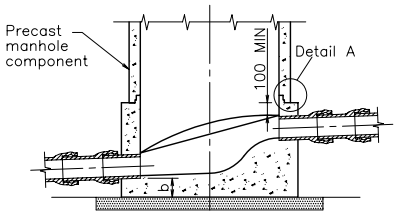

INLET TYPE B

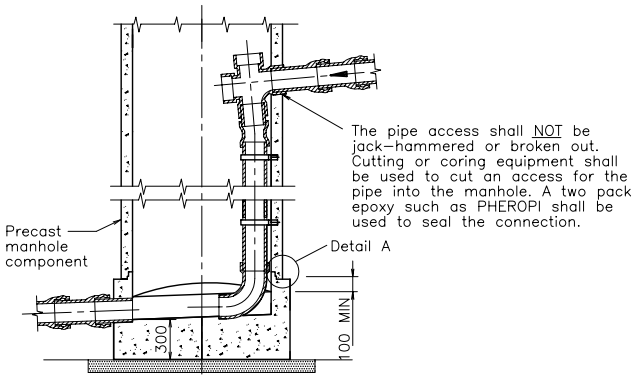

INLET TYPE C

Refer to Standard Drawing 8-50006 for Inlet and Outlet pipework and fixing details.

Revisions	Appd	Date
C Note 9 amended		2/05
B Reference drawing numbers changed, Notes added		02/01
A Section A-A amended		06/97
Original Issue		09/96

Mayor _____
C.E.O. _____
Date _____

Director Assets & Infrastructure

Drawn	T.T.	Rec.	
Checked	L.Mc.	Approved	
Disc.			

Pine Rivers Shire Council
220 Gympie Road
Strathpine
PO Box 5070
Queensland 4500

PINE RIVERS

PRECAST SEWER MANHOLE
1050mm DIAMETER

File No. 400/26
Min Page
Standard Drawing No.
8 50004
C B A

TABLE 1

MANHOLE SIZE vs TYPE C INLETS		
INTERNAL DROPS SIZES (TYPE C)	MANHOLE SIZES – ø	No. OF DROPS
⩽ ø150	ø1100	2
ø225	ø1100	1
ø225	ø1500	2

NOTE

1. uPVC or G.R.P. pipes cast into Manhole walls shall be coated or sanded for the length of wall penetration to ensure bonding.
2. Fabricated fittings are to be PVC welded with joint reinforced with GRP.

TABLE 2

INLET TYPE A		
Manhole description	Diagram	Min. Drop
Same diameter		
Straight through		40
Angle up to 45°		60
Angle from 45°–90°		80
Branch at angle less than 30°		40
Branch at angle 30°–60°		60
Branch at angle 60°–90°		80
Main and branch vary in diameter		
Main Dia. / Branch Dia.		
300 / 225		80
300 / 150		150
300 / 100		200
225 / 150		80
225 / 100		130
150 / 100		50
House drains entering end manhole		
150 House Drain		40
100 House Drain		80

TABLE 3

INLET DROP – DEPTH RANGE								
PIPE SIZE	For Manholes of ø1100				For Manholes of ø1500			
	TYPE A (Refer Table 2)	TYPE B ✱		TYPE C	TYPE A (Refer Table 2)	TYPE B ✱		TYPE C
		Straight through– 0°	90°			Straight through– 0°	90°	
ø100	40 to 300	300 to 570	300 to 430	over 430	40 to 300	300 to 860	300 to 650	over 430
ø150	40 to 300	300 to 570	300 to 400	over 480	40 to 300	300 to 860	300 to 630	over 480
ø225	40 to 300	300 to 540	300 to 370	over 880	40 to 300	300 to 820	300 to 590	over 880
ø300	40 to 300	300 to 500	300 to 350	N/A	40 to 300	300 to 790	300 to 560	N/A
ø375	40 to 300	300 to 470	300 to 350	N/A	40 to 300	300 to 750	300 to 520	N/A
⩾ø450	N/A	N/A	N/A	N/A	40 to 300	N/A	N/A	N/A

✱ = Interpolate for intermediate angles (Refer to Typical Layout of Channels)

Type C minimum drop ranges are based on "off the shelf" fittings as at 1995/1996. Smaller Type C drops (or incoming lines steeper than 1 in 50 that require correctional bends or RRJ couplings) will result in the need for specially fabricated fittings.

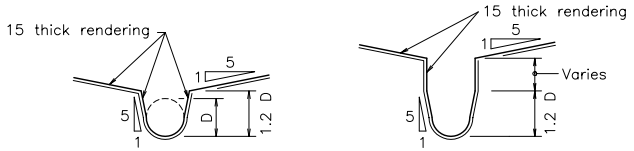

SECTION A – A

SECTION B – B

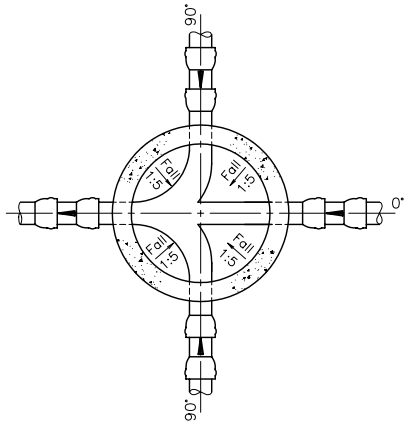

SECTIONAL PLAN
TYPICAL LAYOUT OF CHANNELS

MULTIPLE ENTRY

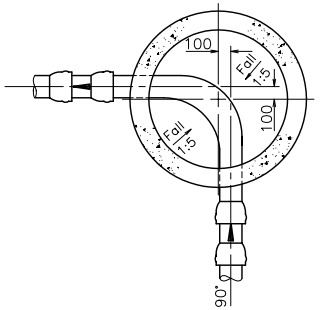

SECTIONAL PLAN
TYPICAL LAYOUT OF CHANNEL

SINGLE ENTRY – 90° BEND

Approved sealants, sealing rings and waterstop materials shall be placed in joints between pipe connections into manholes to ensure the chamber is watertight and will pass the vacuum test. Sewerage systems are to be vacuum tested in accordance with Pine Rivers Shire Council Specifications.

L = 2 x DIA of pipe or 900 MAX.

△ All internal drops shall be uPVC solvent welded fittings and pipe. Where adaptor fittings are unavailable to match other incoming pipeline materials, internal drops and connectors shall be fabricated from M.D.P.E.

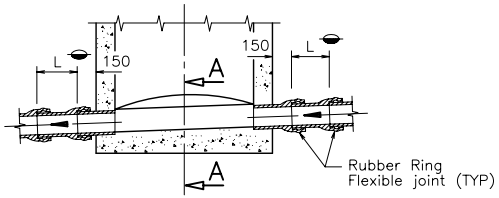

INLET TYPE A

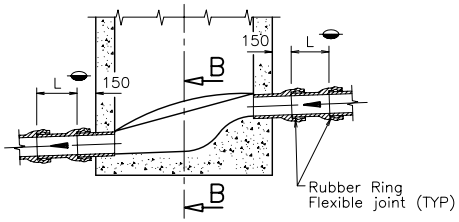

INLET TYPE B

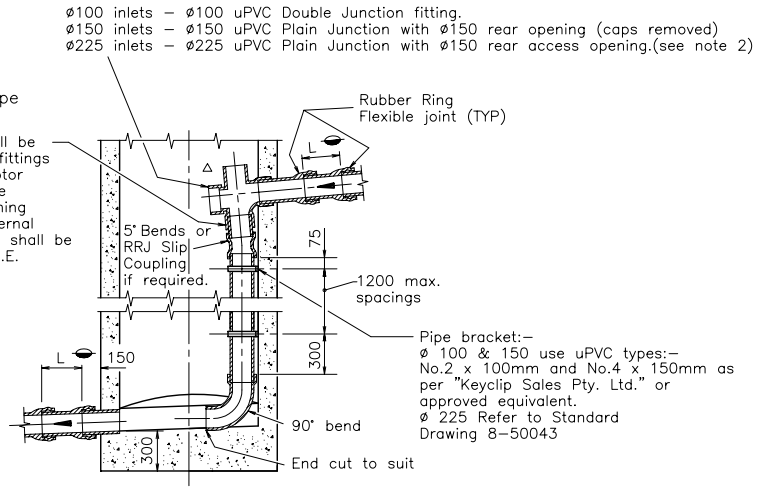

INLET TYPE C

Revisions	Appd	Date
B Reference drawing numbers and Type C changed.		02/01
A Table 3 amended, Note 1 added.		06/97
Original Issue		09/96

Mayor _____
C.E.O. _____
Date _____

Director Works and Services
Drawn | T.T. | Rec.
Checked | L.Mc. | Approved
Disc.

Pine Rivers Shire Council
220 Gympie Road
Strathpine
PO Box 5070
Queensland 4500

PINE RIVERS

SEWER MANHOLES
DETAILS OF INLETS AND OUTLETS

File No. 400/26
Min Page 01/0436
Standard Drawing No.
8 | 50006 | B A

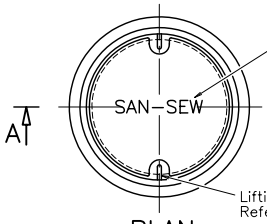

PLAN

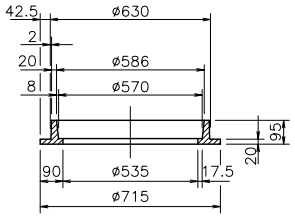

FRAME

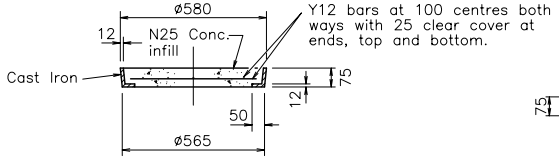

COVER

SECTION A – A

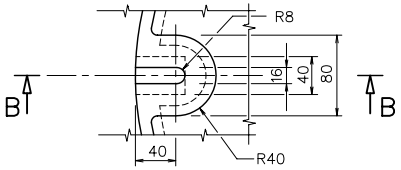

PLAN

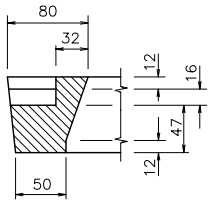

SECTION B – B

DETAIL OF LIFTING SLOTS
CONCRETE FILLED

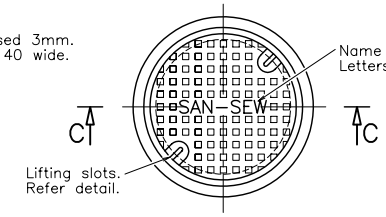

PLAN

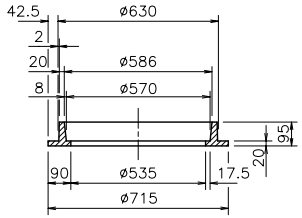

FRAME

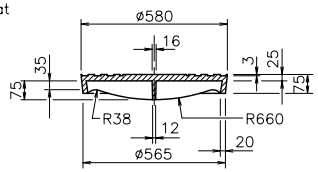

COVER

SECTION C – C

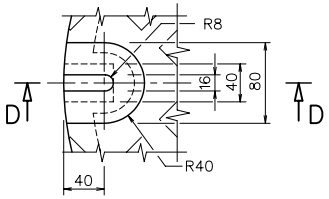

PLAN

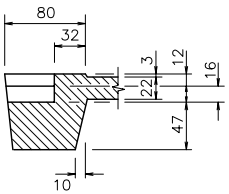

SECTION D – D

DETAIL OF LIFTING SLOTS
CAST IRON

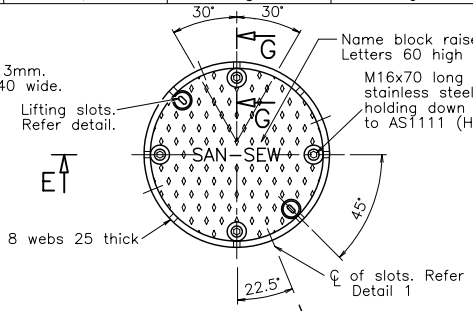

PLAN

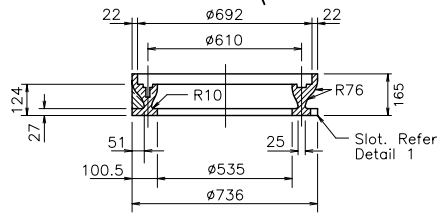

FRAME

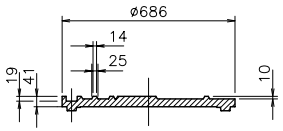

COVER

SECTION E – E

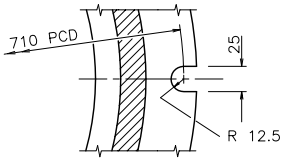

4 N° slots as shown

DETAIL 1

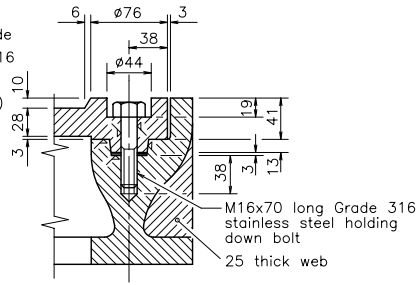

SECTION G – G

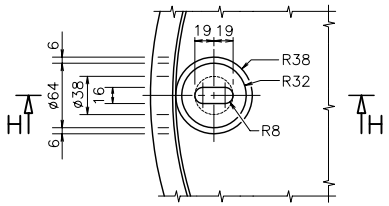

PLAN

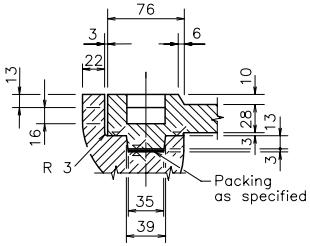

NOTE: ✓ denotes machined surface

SECTION H – H

DETAIL OF LIFTING SLOTS

BOLT–DOWN CAST IRON

NOTES.

1. Cast iron covers are to be used in roadways or where vehicular traffic is present.
2. Bolt down covers are to be used near creek banks, in flood prone areas, or in parks and reserves.
3. Concrete filled covers may be used elsewhere unless otherwise directed.
4. Cast iron covers and frames shall be manufactured from Grade T–220 cast iron to AS 1830.
5. Alternative cast iron covers and frames complying with:– AS 3996 – Class 'D' may be used.
6. All lids are to be sealed as specified.

Revisions	Appd	Date
Original Issue		09/96

Mayor _____
C.E.O. _____
Date _____

Director Works and Services
Drawn | Rec.
Checked | Approved
Disc.

Pine Rivers Shire Council
220 Gympie Road
Strathpine
PO Box 5070
Queensland 4500

PINE RIVERS

SEWER MANHOLE
COVERS AND FRAMES

File No. 400/26
Min Page
Standard Drawing No.
8 50007

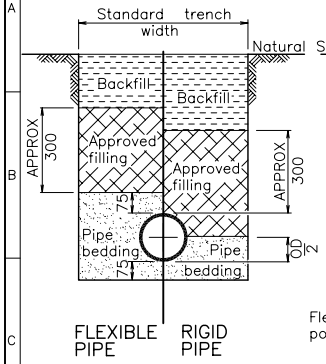

TYPE 1

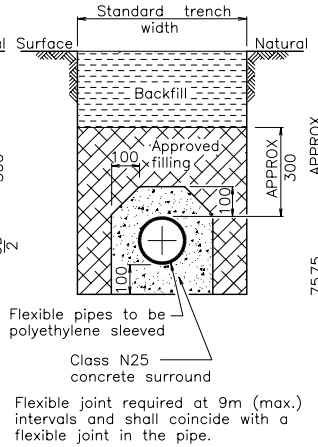

TYPE 2

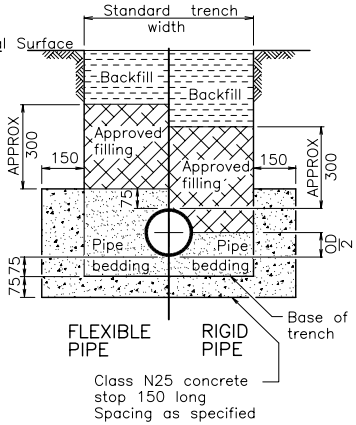

TYPE 3

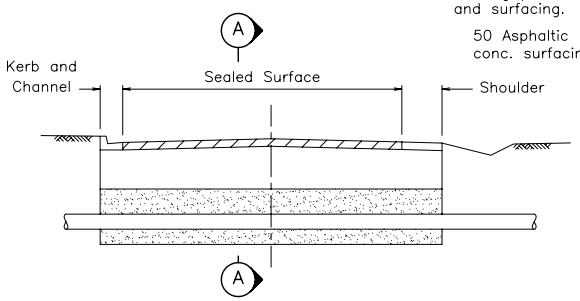

ELEVATION

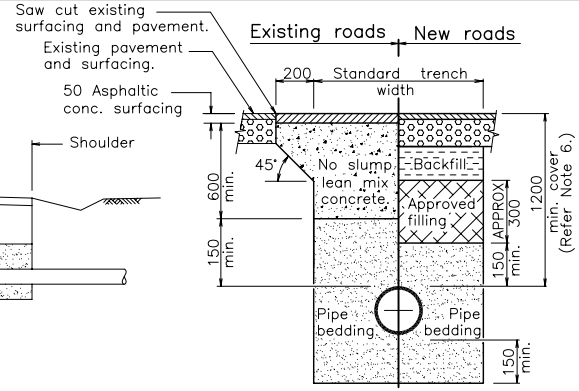

SECTION A–A

CONSTRUCTION OF SEWER MAINS UNDER SEALED ROADS

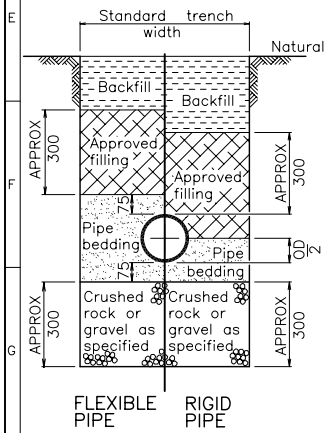

TYPE 4

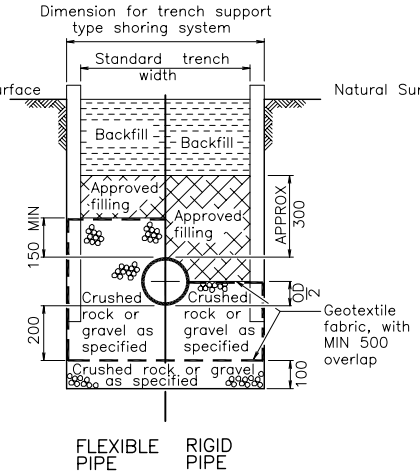

TYPE 5

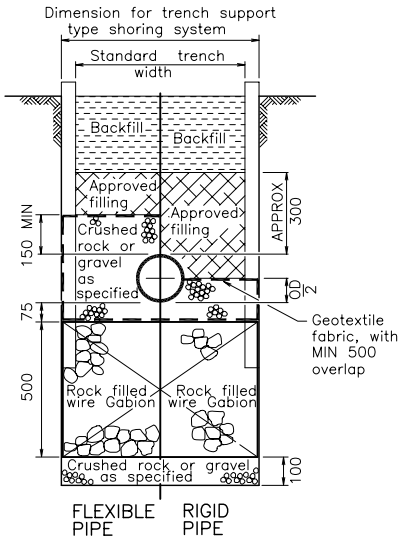

TYPE 6

GENERAL NOTES

1. Unless otherwise stated, dimensions are in millimetres.
2. Pipe bedding shall be non cohesive granular material free from particles which may be retained on a 9.5mm sieve. (Refer Specifications) For the purpose of pipe type bedding:
   (a) Vitrified clay, mild steel cement lined, ductile iron cement lined, fibre cement and concrete pipes are classified as rigid pipes. (Refer Note 3.)
   (b) Unplasticised polyvinyl chloride, glass filament reinforced thermosetting plastics, acrylonitrite butadiene styrene and polyethylene pipes are classified as flexible pipes. (Refer Note 3.)
3. Fibre cement, concrete, glass filament reinforced thermosetting plastic, acrylonitrite butadiene styrene and polyethylene pipes are only to be used with the written permission of Council's Engineer.
4. Approved filling shall be non cohesive and free from particles which may be retained on a 30mm sieve when placed above the pipe bedding surround of flexible pipes and; free from particles which may be retained on a 19.5mm sieve when placed against a rigid pipe barrel. The pipe bedding may be required to be extended 75mm above the top of rigid pipes at the discretion of Council's Engineer.
5. Soil testing shall be in accordance with:–
   AS 1289 "Methods of Testing Soils for Engineering Purposes"
6. The minimum cover to pipes under sealed roadways may be varied where approved by Council's Engineer. Where a lesser cover is approved; that section of sewer shall be constructed of approved cement lined Ductile iron pipe. The absolute minimum cover shall be not less than the full depth of pavement material plus 150mm pipe bedding.
7. Longitudinal trenches constructed under existing roadways may be constructed as for new roads where approved by Council's Engineer, provided, satisfactory compaction standards are achieved.

BACKFILL	COMPACTION	
Allotments	95%	Standard
Footpaths	95%	Standard
Roads		
–Base Course	98%	Modified
–Sub–base	95%	Modified
–Blanket Course	95%	Modified
–Subgrade –Top 150mm	100%	Standard
–Balance	95%	Standard

DIA of Pipe	100	150	225	300	375	450	525	600	675	750	825	900
Standard trench width	600	600	675	750	825	900	1000	1075	1150	1300	1375	1450

Revisions	Appd	Date
A Concrete class changed to N25		2/05
Original Issue		09/96

Mayor _____
C.E.O. _____
Date _____

Director Assets & Infrastructure
Drawn | Rec.
Checked | Approved
Disc.

Pine Rivers Shire Council
220 Gympie Road
Strathpine
PO Box 5070
Queensland 4500

PINE RIVERS

SEWER PIPELINE CONSTRUCTION
TYPICAL TRENCH DETAILS

File No. 400/26
Min Page
Standard Drawing No.
8 50008
A

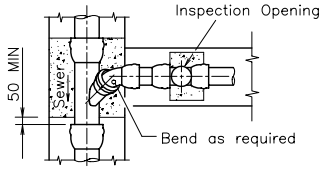

PLAN

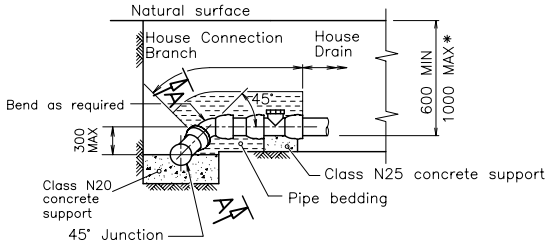

ELEVATION

TYPE A

VERTICAL DROP 0 TO 300

*The maximum depth to the inspection pipe may be varied only if there is insufficient cover to serve the block

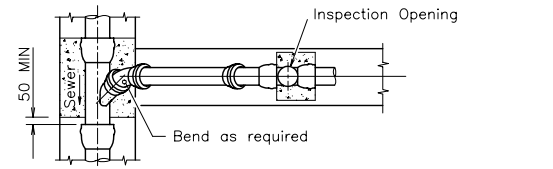

PLAN

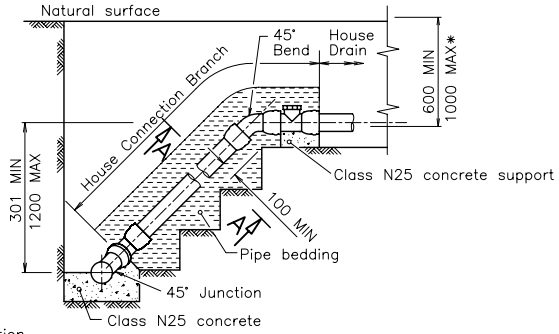

ELEVATION

TYPE B

VERTICAL DROP 301 TO 1200

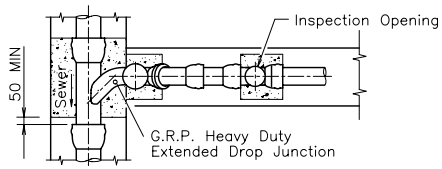

PLAN

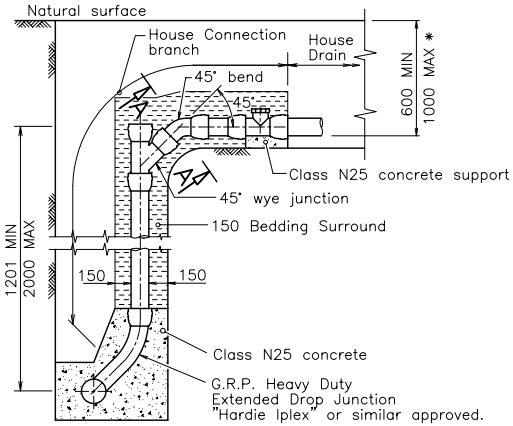

ELEVATION

TYPE C

VERTICAL DROP 1201 TO 2000

NOTE: Avoid Type C drops to pipeline where possible. Connection to a manhole is preferable.

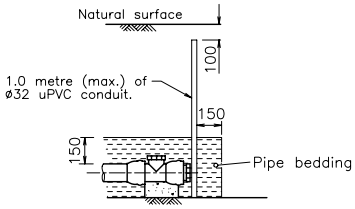

HOUSE CONNECTION MARKER

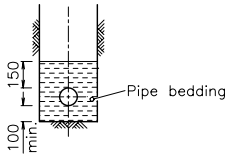

SECTION AA

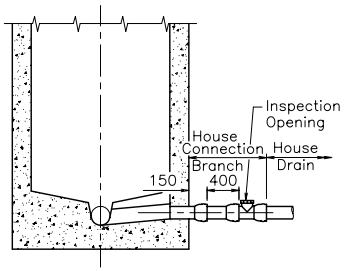

INLET TYPE A

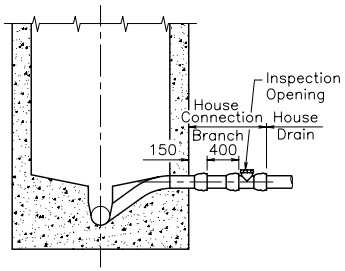

INLET TYPE B

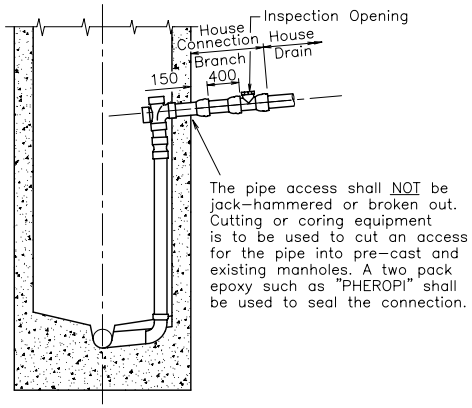

The pipe access shall NOT be jack-hammered or broken out. Cutting or coring equipment is to be used to cut an access for the pipe into pre-cast and existing manholes. A two pack epoxy such as "PHEROPI" shall be used to seal the connection.

INLET TYPE C

Refer to Standard Dwg 8-50006 for details of Inlets and Outlets to manholes.

NOTES

1. All concrete shall be Class N25 (Excluding manholes)
2. All joints shall be flexible rubber ring joints.
3. Where rigid pipes are used in sewers 600mm long pipes shall be located on either side of the house connection branch
4. Unless otherwise stated, dimensions are in millimetres
5. The House Connection branch shall extend min. 1000mm (or as directed) beyond the property boundary, into the allotment being serviced.
6. The location and level of the end of the House Connection branch shall be in accordance with Council's Design Manual.
7. Approved sealants, sealing rings and waterstop materials shall be placed in joints between the manhole top and wall, wall sections, pipe connections into manholes to ensure the chamber is watertight and will pass the vacuum test.
8. Sewerage systems are to be vacuum tested in accordance with Pine Rivers Shire Council Specifications.

Revisions	Appd	Date
C Concrete class changed to N25		2/05
B Note 2 changed, Notes 7 + 8 added.		02/01
A House Connection Marker detail amended.		06/97
Original Issue		09/96

Mayor _____
C.E.O. _____
Date _____

Director Assets & Infrastructure
Drawn | T.T. | Rec.
Checked | L.Mc. | Approved
Disc.

Pine Rivers Shire Council
220 Gympie Road
Strathpine
PO Box 5070
Queensland 4500

PINE RIVERS

HOUSE CONNECTION BRANCHES
PIPELINE AND MANHOLE

File No. 400/26
Min Page
Standard Drawing No. 8 50009 C B A

NOTE:

UNLESS SHOWN OTHERWISE ON THE JOB DRAWING THE FOLLOWING SHALL APPLY

1. Explanation of reinforcing bar notations

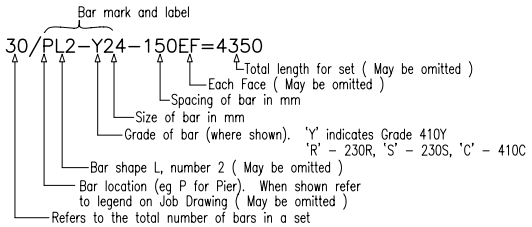

2. Grade of reinforcing bars shall be in accordance with AS 4671 and as follows:-
   (a) Bars 10mm diameter and all 'DOWELS' - Grade 230R plain round bars.
   (b) Bars 12mm diameter and larger:-
   (i) Grade 230S hot rolled deformed bars
   (ii) Grade 410C cold worked deformed bars
   (iii) Grade 410Y hot rolled deformed bars
   Refer to bar notations on job drawings.

3. Hard drawn steel wire reinforcing fabric shall conform to AS 4671 and the reinforcement number will be prefixed by F if a bar mark and label is to be shown e.g. F81-02

4. "d" denotes diameter of bar or fitment.

5. The diameter of the pin around which a bar is bent shall be not less than the following:
   (a) For fitments:
   (i) Wire 3d
   (ii) Grade 230 3d
   (iii) Grade 410 4d
   (b) For reinforcement, other than (c) and (d) below 5d
   (c) For reinforcement in which the bend is to be subsequently straightened or rebent:
   (i) 16mm DIA or less 4d
   (ii) 20mm DIA & 24mm DIA 5d
   (iii) 28mm DIA or greater 6d
   (d) For reinforcement which is epoxy coated or galvanised:
   (i) 16mm DIA or less 5d
   (ii) 20mm DIA or greater 8d

6. All reinforcement shall be bent around a 5d pin, unless the reinforcement complies with either Note 5(c)(iii) or 5(d)(ii) above when the reinforcement shall be bent around the minimum diameter pin allowed.

7. All fitments shall be bent to the minimum diameter listed in Note 5(a) above.

8. A standard hook shall consist of a 135° or 180° bend with an internal diameter as in Note 6 and a straight extension of 4d or 70mm whichever is greater.

9. A standard cog shall consist of a 90° bend with an internal diameter as in Note 6 and having the same total length as required for a 180° hook of the same diameter bar.

10. A fitment hook shall consist of a 135° or 180° bend with an internal diameter as in Note 7 and a straight extension of 4d or 70mm whichever is greater.

11. A fitment cog shall consist of a 90° bend with an internal diameter as in Note 7 and having the same total length as required for a 180° hook of the same diameter bar.

12. "Dowels" shall have at least one end cut with a saw (not flame or shear cut).

13. Steel reinforcement shall be kept 40 mm clear of P.V.C. waterstops.

14. Reinforcing bars shall be bent around openings and penetrations to provide 50mm cover. Bars shall be cut only as approved by the Superintendent.

15. Provide 50 mm clear cover to reinforcement. The specified cover is not to be reduced.

16. Unless otherwise noted on job drawings, reinforcement in singly reinforced sections shall be placed centrally.

17. Provide laps to reinforcement as shown on job drawings. On all circular structures the laps for hoops shall be staggered and located as directed by the Superintendent. The bars shall be in long lengths so that the number of laps is kept to a minimum.

18. Straight bars may be curved during placement. BS4466 lists the maximum diameter of bar that can be curved to a given radius while being placed. These bars will have the shape code of a curved bar. The steel supplier may supply these bars as straight bars, which will be curved as they are placed in position in the structure, if approved by the Superintendent.

19. Location code
   On job drawings the following abbreviations apply to the location of reinforcement

EF	Each Face	IL	Inner Layer
NF	Near Face	OL	Outer Layer
FF	Far Face	CENTRAL	Centrally placed
INTF	Internal Face	EW	Each Way
EXTF	External Face	HORIZ	Horizontal
B	Bottom face	VERT	Vertical
T	Top face		

20. Bar bending schedules are the responsibility of the contractor.

21. Schedulers should note that end legs not restricted by the face of the structure should not be dimensioned, as the cut length will determine this dimension. Critical dimensions shall be marked thus *

22. The addition of a hook or cog does not alter the shape code, but the scheduler must draw a separate diagram in the bar bending schedule for the relevant bars.

23. Where the radius of curvature is given it shall be measured to the outside of the bar. Where the diameter of a 90° bend is greater than 550mm, show as external radius "ER" on bar bending schedule.

24. Hoops:
   (a) "Length" shall represent total length of bar required to form hoop and shall include allowance for laps.
   (b) Diameter of hoop shall be measured to outside of bar.

25. All dimensions shall be to intersections of straight portions at the outside of all types of bends (except shape A) and to the outside of bar in other cases.

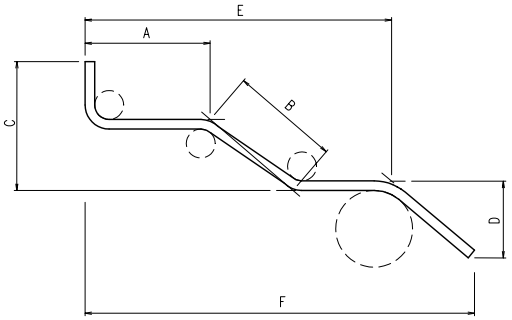

NOTE : REFER TO JOB DRAWINGS FOR NON STANDARD SHAPES AND OTHER ADDITIONAL INFORMATION.

STANDARD BAR BENDING SHAPES

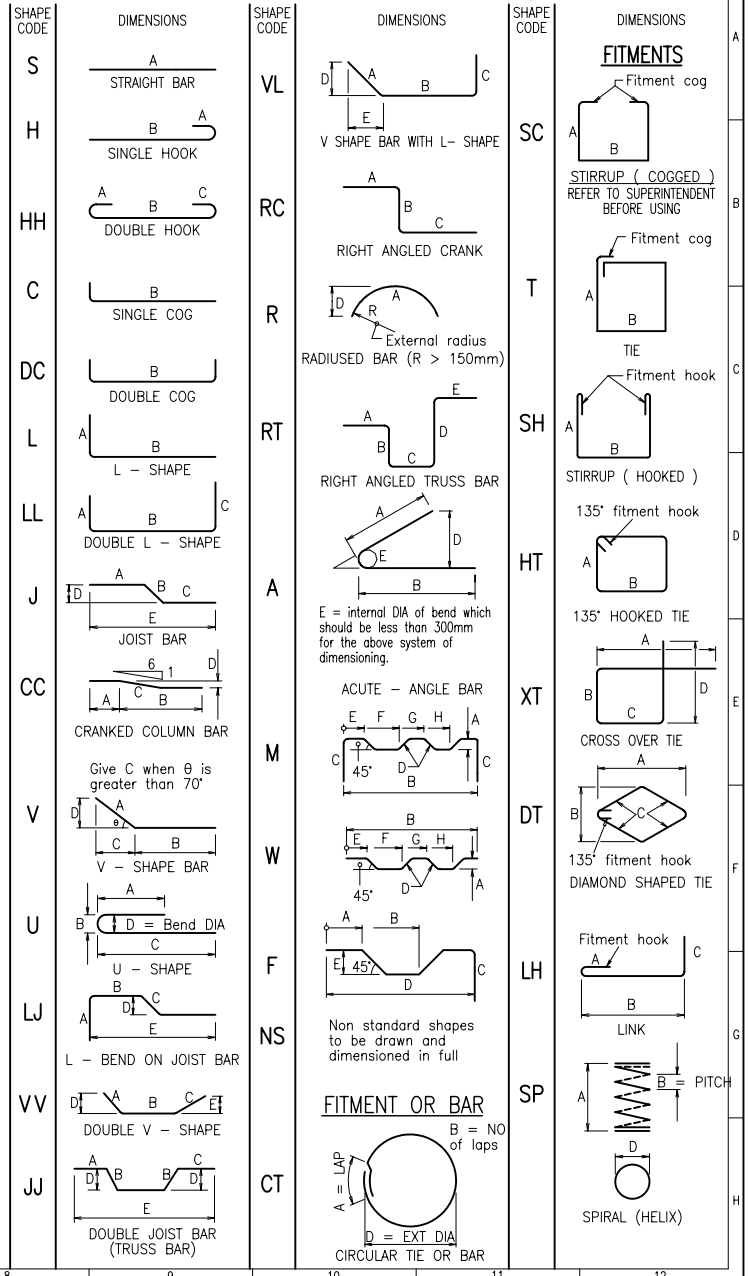

Revisions	Appd	Date
A AS for reinforcing steel amended		2/05
Original Issue		09/96

Mayor _____
C.E.O. _____
Date _____

Director Assets & Infrastructure
Drawn | Rec.
Checked | Approved
Disc.

Pine Rivers Shire Council
220 Gympie Road
Strathpine
PO Box 5070
Queensland 4500

PINE RIVERS

STANDARD REINFORCEMENT DETAILS

File No. 400/26
Min Page
Standard Drawing No. 8 50010 A

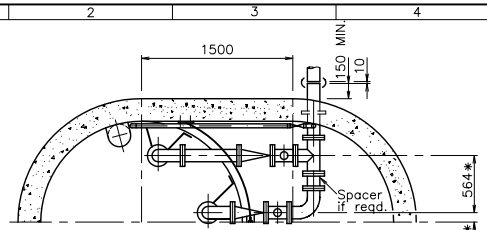

ALTERNATIVE SIDE DISCHARGE

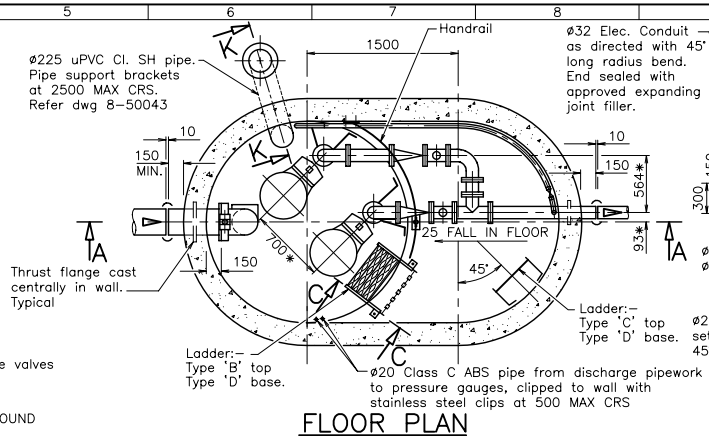

FLOOR PLAN

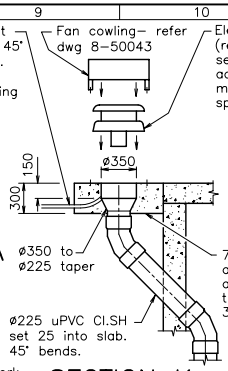

SECTION K – K

VENTILATION FAN (WHERE REQUIRED)

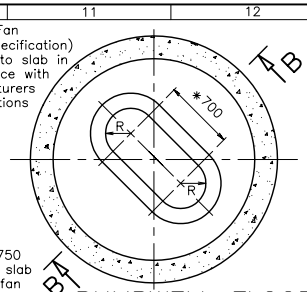

PUMPWELL FLOOR

SHOWING BENCHING ONLY REFER NOTE 6

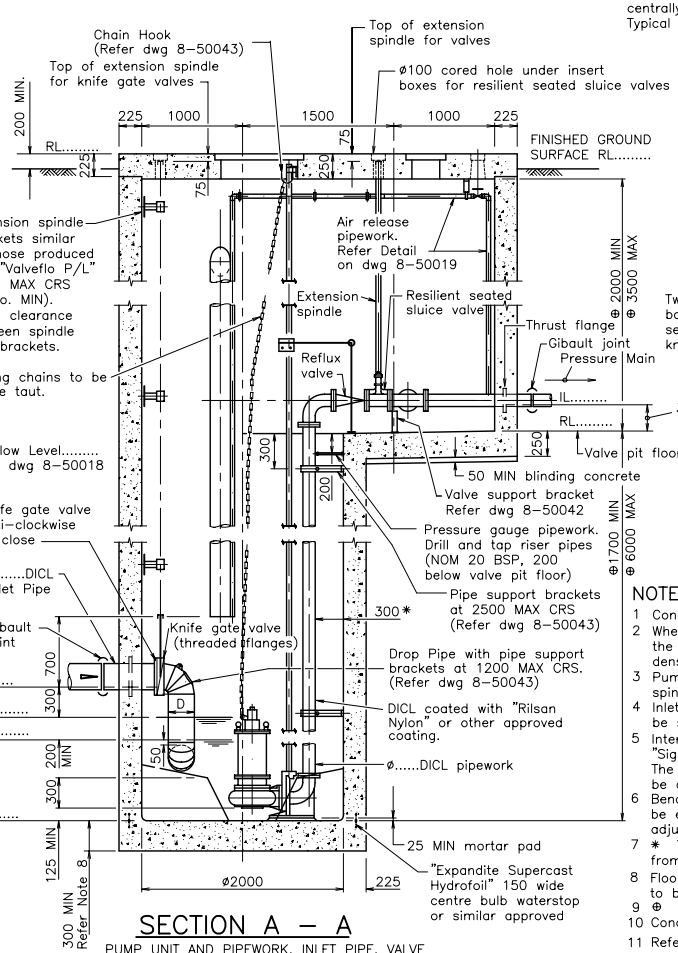

SECTION A – A

PUMP UNIT AND PIPEWORK, INLET PIPE, VALVE AND OPENINGS IN ROOF ARE SHOWN IN SECTION PLANE FOR CONVENIENCE. BENCHING NOT SHOWN. REFER PUMPWELL FLOOR DETAIL FOR BENCHING ARRANGEMENT.

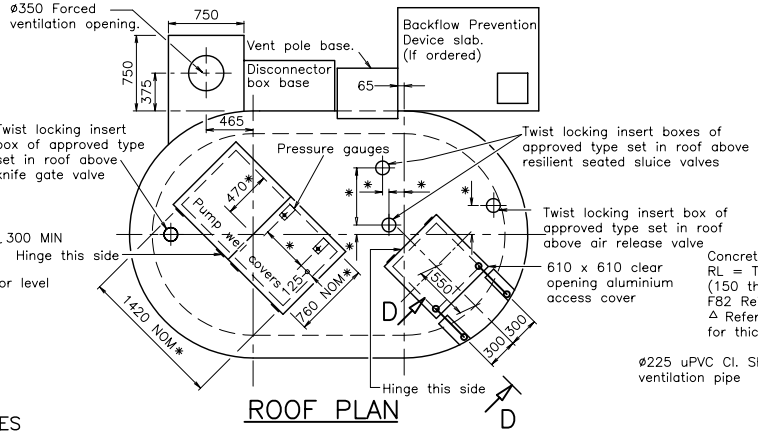

ROOF PLAN

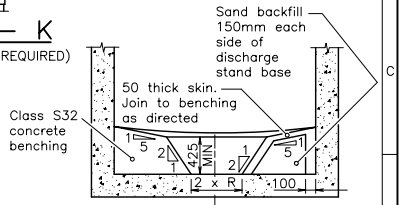

SECTION B – B

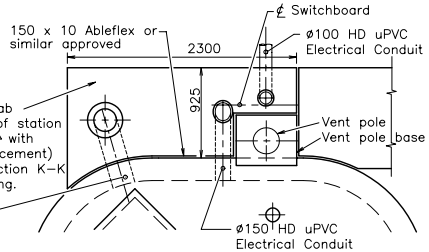

SLAB DETAIL FOR VENTPOLE MOUNTED SWITCHBOARD

NOTES

1. Concrete to be Class S32 in accordance with A.S. 1379 and A.S. 3600.
2. Where the pumping station is constructed in part or wholly in open cut excavation, backfill under the valve pit section shall be approved material. Granular material (Non cohesive) shall be compacted to relative density index 70 and non–granular material (cohesive) to 98% maximum dry density Standard Compaction.
3. Pumping equipment and associated discharge pipework, including all support brackets valves and extension spindles, shall be supplied and installed by the Equipment Contractor.
4. Inlet pipework and associated fittings, all roof insert boxes, ladders, handrails and both access covers shall be supplied and installed by the Civil Contractor.
5. Internal walls, benching, and top slab soffit shall be coated with Peerless Emulsion "Epigen 1311" or Wattyl "Sigmaguard CSF 75" (White) applied in two coats with a total dry film thickness of 600 microns minimum. The resultant coating shall have a smooth surface, free from irregularities of undulations. Valve pit floor shall be coated with a 5mm thick layer of Monier "Relpatch Acrylic Modified Mortar", or approved equivalent.
6. Benching dimensions shall be as directed by the Superintendent. The "Radius" at floor level shall be equal to the pump unit's volute radius with concurrent centre lines. The 700* dimension shall be adjusted to suit the pump unit spacing. The 50mm thick skin shall be 2:1 fine sand and cement mortar.
7. * These dimensions shall be supplied by the Superintendent upon receipt of approved drawings from the Equipment Contractor
8. Floor and plug thicknesses shown are minimum only, thickness to counter floatation is to be determined by Design Consultant for each case.
9. ⊕ Dimensions for design purposes only. Levels supersede these– when nominated.
10. Concrete Cold Joints shall have Water Stop at every pour lift.
11. Refer to dwg 8–50019 for details of Control Manhole.
12. Lifting chains shall be Grade L steel, hot dipped galvanised, tested and certified, and have a lifting eye @ 1.5m crs.
13. Ladders shall finish 150mm above finished floor to allow for easier cleaning. Refer to dwg 8–50042 for installation and fabrication details; and Sections C–C and D–D.
14. RPZ device to be installed to the water service of all Pumping Stations– refer dwg 8–50017

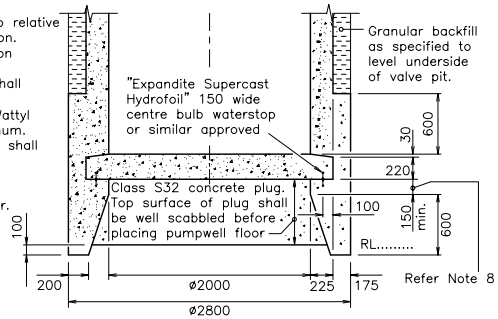

PART SECTION A – A ALTERNATIVE CAISSON CONSTRUCTION

Revisions	Appd	Date
A Reference drawing numbers changed		02/01
Original Issue		09/96

Mayor _____
C.E.O. _____
Date _____

Director Works and Services

Drawn	T.T.	Rec.	
Checked	L.Mc.	Approved	
Disc.			

Pine Rivers Shire Council
220 Gympie Road
Strathpine
PO Box 5070
Queensland 4500

PINE RIVERS

SUBMERSIBLE SEWAGE PUMPING STATION

2000mm DIA– GENERAL ARRANGEMENT FOR RISING MAINS OF ø100 – ø200

File No. 400/26
Min Page 01/0436
Standard Drawing No. 8 50015 A

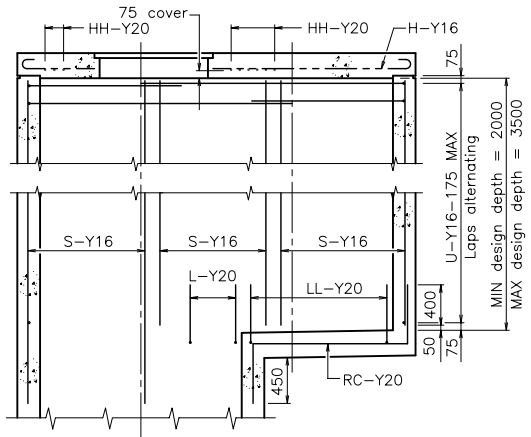

PART SECTION A – A
UPPER WELL AND VALVE CHAMBER

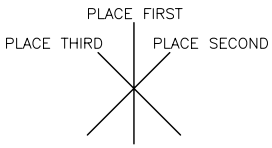

ROOF
REINFORCEMENT
PLACEMENT

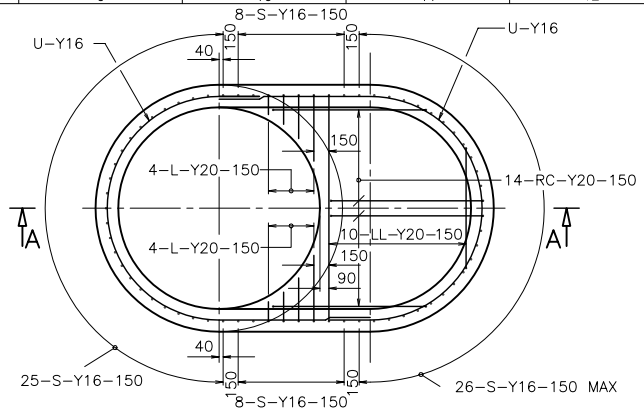

FLOOR PLAN

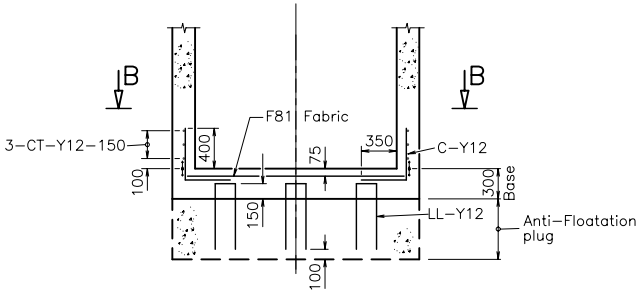

PART SECTION A – A
CYLINDRICAL BASE AND ANTI–FLOATATION PLUG

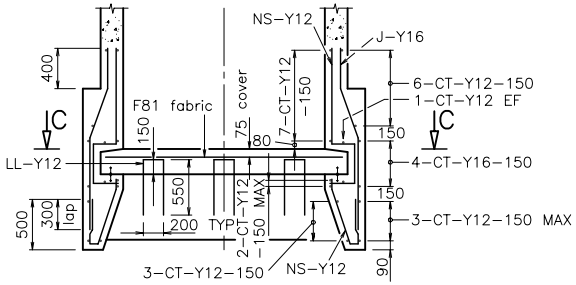

PART SECTION A – A
ALTERNATIVE CAISSON CONSTRUCTION

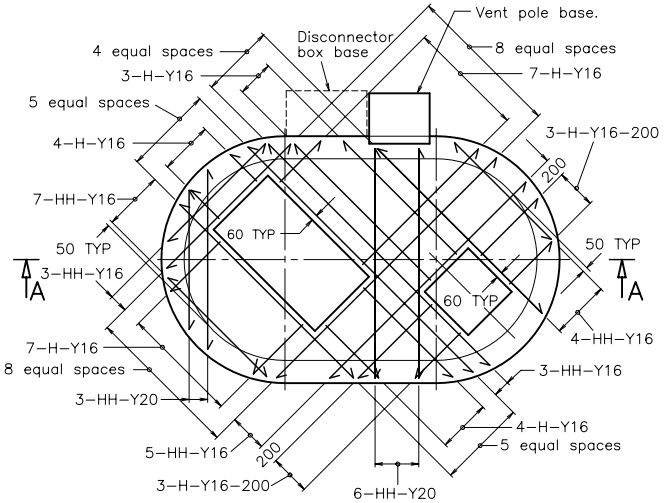

ROOF PLAN

WHERE NO BAR SPACING IS GIVEN, BARS SHALL BE EQUALLY SPACED

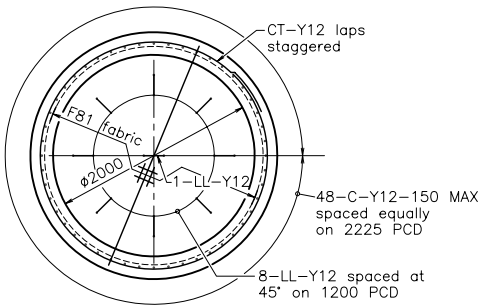

SECTION B – B

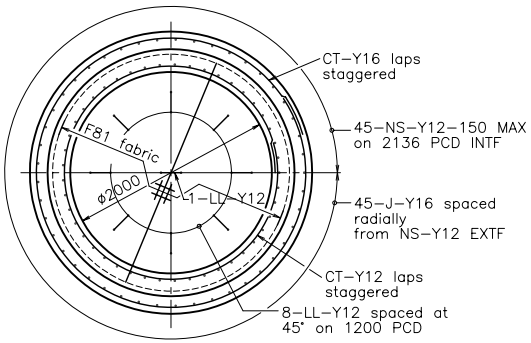

SECTION C – C

NOTES

1 Unless shown otherwise reinforcement shall be placed centrally in walls and floors.
2 Reinforcement shall be placed 40 clear of PVC waterstop.
3 Unless shown otherwise reinforcement shall have the following laps:–
Y12 = 300. Y16 = 400. Y20 = 500
4 F81 fabric shall have following laps:– End laps = 225. Side laps = 125
5 Design based on AUSTROADS A14 Standard Vehicle Loading
6 All fasteners excluding nuts shall be Grade 316 stainless steel.
Nuts shall be Grade 304 stainless steel
7 Nylon or polythene separation inserts shall be used between stainless steel fasteners and aluminium sections.
8 Anti–galling lubricant "Loctite 222 or 567" or similar shall be used on all threads. and between all stainless steel abutting surfaces
9 Reinforcement Identification details are given on dwg 8–50010

Revisions	Appd	Date
Original Issue		09/96

Mayor _____
C.E.O. _____
Date _____

Director Works and Services
Drawn | Rec.
Checked | Approved
Disc.

Pine Rivers Shire Council
220 Gympie Road
Strathpine
PO Box 5070
Queensland 4500

PINE RIVERS

SUBMERSIBLE SEWAGE PUMPING STATION
2000mm DIA– REINFORCEMENT DETAILS

File No. 400/26
Min Page
Standard Drawing No. 8 50016

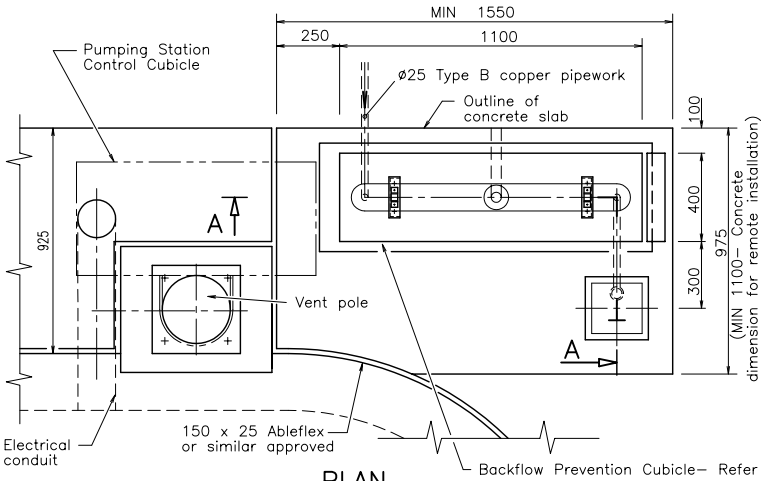

PUMPING STATION

PLAN

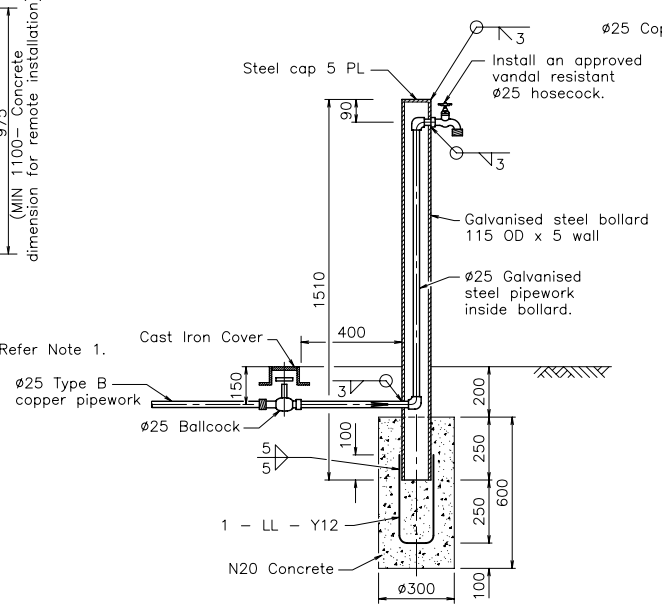

ALTERNATIVE HOSECOCK ON STAND

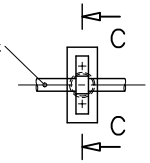

PLAN

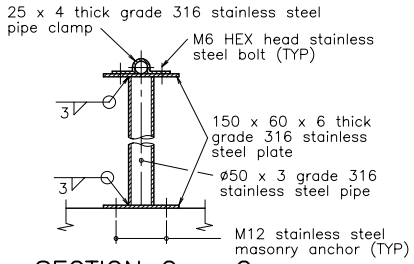

SECTION C – C
FABRICATED PIPE SUPPORT

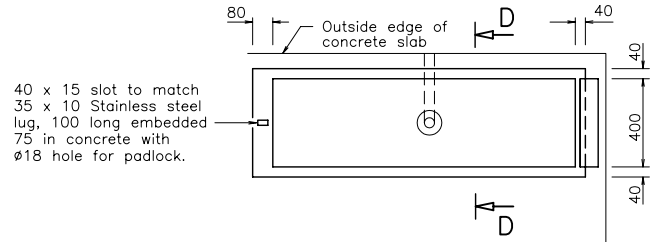

PLAN
(Lid and Drain Only)

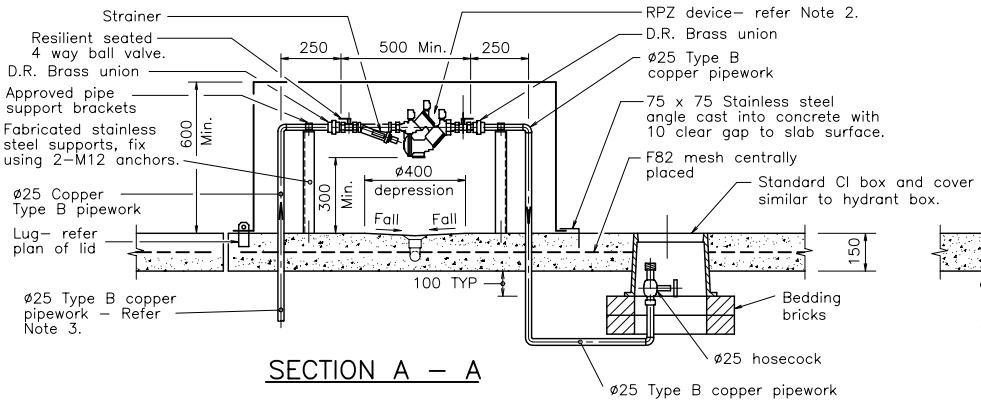

SECTION A – A

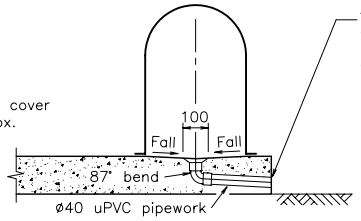

SECTION D – D

NOTES

1. Backflow Preventer Cubicles construction:– 3mm Marine Grade 316 stainless steel, TIG welded and ground smooth free of crevices.
2. Reduced Pressure Zone device shall be RMC Watts 909 or similar approved in accordance with AS2845.1 complete with ball valves and strainer. The strainer must be located in the position as shown on this drawing.
3. A larger diameter water service may be required where directed Council's Engineer.
4. Copper pipework to be Type B. All fittingss to be brass or silver soldered copper, Type B dezincification resistant to AS 1565.

Revisions	Appd	Date
A Pipework changed to Copper		02/01
Original Issue		09/96

Mayor _____
C.E.O. _____
Date _____

Director Works and Services
Drawn J.C. Rec.
Checked T.T. Approved
Disc.

Pine Rivers Shire Council
220 Gympie Road
Strathpine
PO Box 5070
Queensland 4500

PINE RIVERS

BACKFLOW PREVENTION DEVICE

File No. 400/26
Min Page 01/0436
Standard Drawing No. 8 50017 A

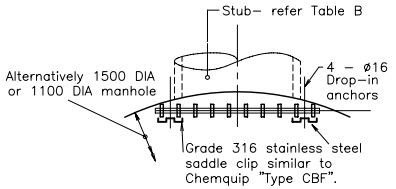

SECTIONAL PLAN A – A

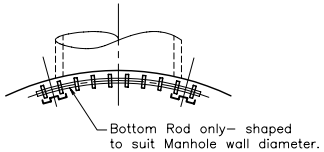

SECTIONAL PLAN B – B

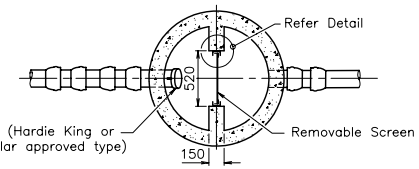

PLAN

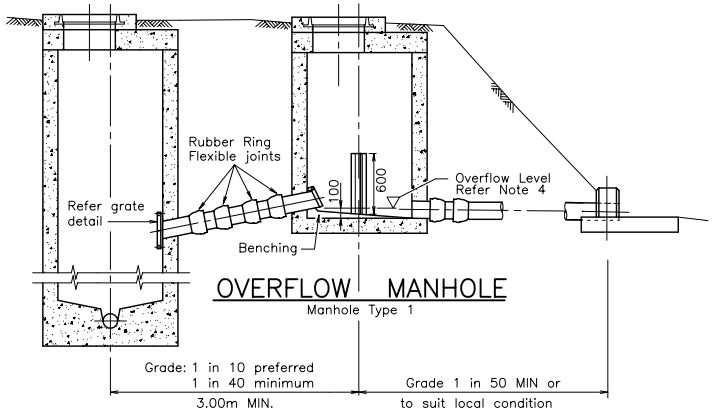

OVERFLOW MANHOLE

Manhole Type 1

SEWER MANHOLE

MAY BE CONTROL MANHOLE AT PUMPING STATION OR SUITABLE UPSTREAM MANHOLE

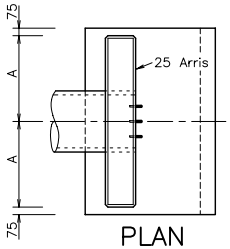

PLAN

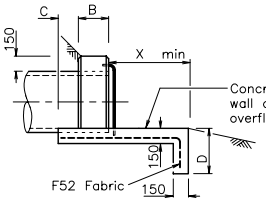

ELEVATION

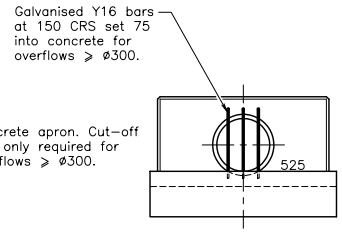

SIDE ELEVATION

END WALL DETAILS

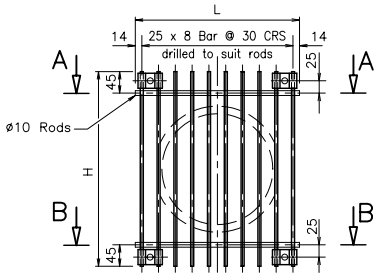

ELEVATION

GRATE DETAILS

TABLE B GRATE DIMENSIONS

Overflow Pipe Dia.	L x H	Bars at 30 CRS.	Length Of Stub
100	300 x 390	10	375
150	300 x 390	10	375
225	300 x 390	10	375
300	480 x 540	15	500
375	480 x 540	15	500
450	620 x 680	18	500
525	620 x 680	18	500
600	760 x 780	22	500

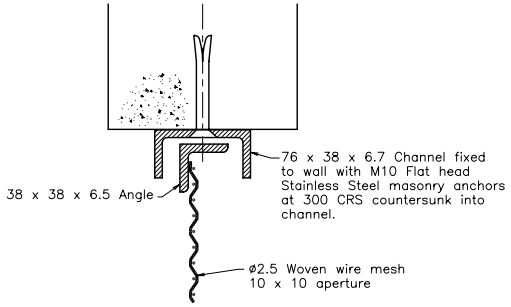

SCREEN GUIDE RAIL DETAIL

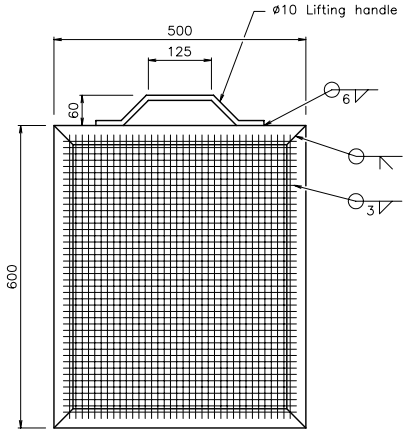

SCREEN DETAIL

TABLE A END WALL DIMENSIONS

Overflow Pipe Dia.	A	B	C	D	X
100	275	150	75	N/A	300
150	300	150	75	N/A	300
225	400	225	225	N/A	350
300	475	225	225	450	450
375	600	225	225	450	565
450	725	225	225	450	675
525	850	300	225	450	790
600	975	300	225	450	900

NOTES

Overflow

1. Pipe diameter, class and type to be as shown on job/design drawings
2. All Concrete shall be grade N25
3. Diameter of overflow to equal diameter of inlet sewer.
4. The overflow shall be at a level such that effluent backup does not discharge from upstream manholes, house connections, or the Pump Station.

Grate

5. Fabricate grate from, alternatively:–
   (a) Aluminium sections shall be Aluminium Alloy 5083–H321
   (b) Steel, hot dip galvanised after fabrication.
   (c) Chemquip "Corotec" fibreglass grating or similar
   (d) H.D.P.E.
6. Anchors shall be M16 Grade 316 stainless steel Drop–in anchors complete with spacer tubes and washers. (Ramset Dynaset or similar)

Screen

7. All steelwork to be hot dip galvanised to AS 4680 after fabrication.

Revisions	Appd.	Date
A Notes 2 and 7 changed		2/05
Original Issue		09/96

Mayor _____
C.E.O. _____
Date _____

Director Assets & Infrastructure
Drawn | Rec.
Checked | Approved
Disc.

Pine Rivers Shire Council
220 Gympie Road
Strathpine
PO Box 5070
Queensland 4500

PINE RIVERS

SEWAGE OVERFLOW ARRANGEMENT

File No. 400/26
Min Page
Standard Drawing No.
8 50018 A

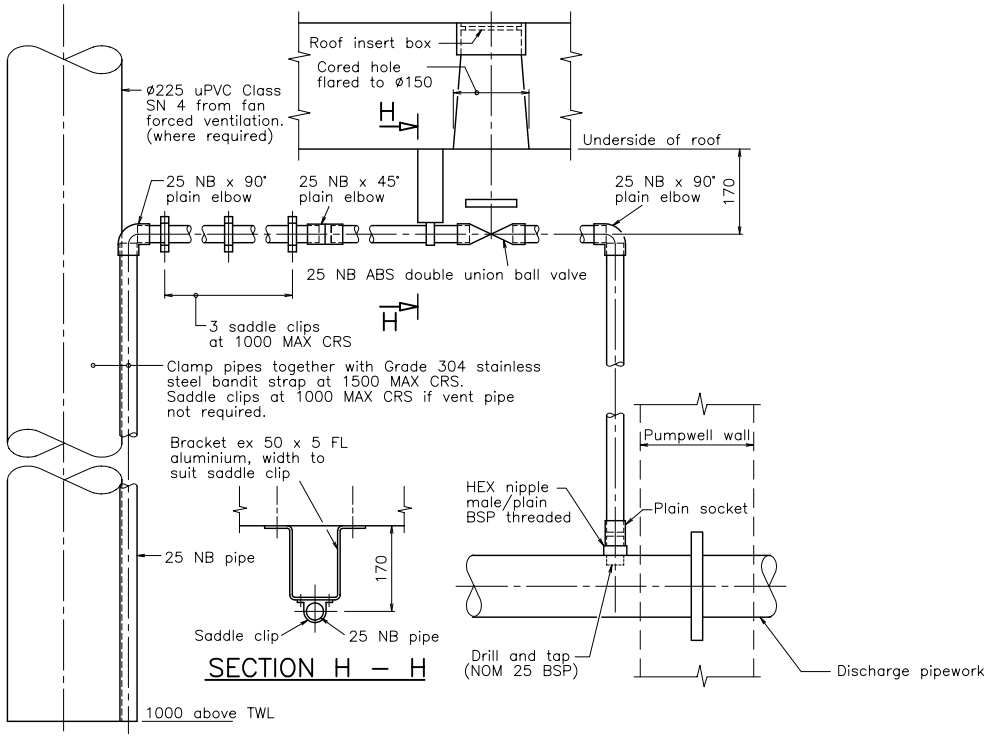

AIR RELEASE PIPEWORK DETAILS
DEVELOPED ELEVATION

UNLESS NOTED OTHERWISE PIPEWORK SHALL BE ABS CLASS C

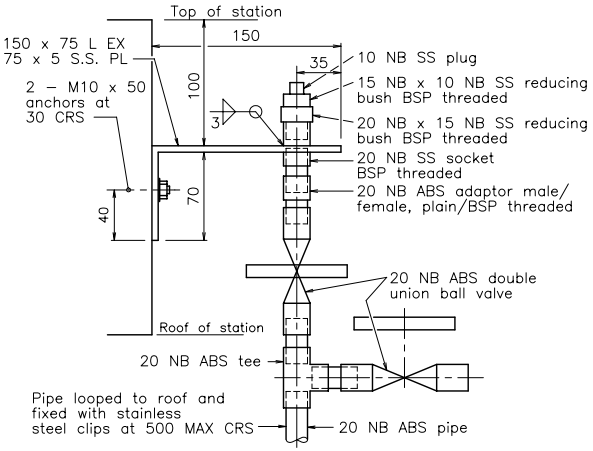

PRESSURE GAUGE ARRANGEMENT

SS INDICATES STAINLESS STEEL GRADE 316

Revisions	Appd	Date
A Vent pipe class amended		2/05
Original Issue		09/96

Mayor _____
C.E.O. _____
Date _____

Director Assets & Infrastructure
Drawn | Rec.
Checked | Approved
Disc.

Pine Rivers Shire Council
220 Gympie Road
Strathpine
PO Box 5070
Queensland 4500

PINE RIVERS

SEWAGE PUMPING STATION
AIR RELEASE

File No. 400/26
Min Page
Standard Drawing No.
8 | 50019 | A

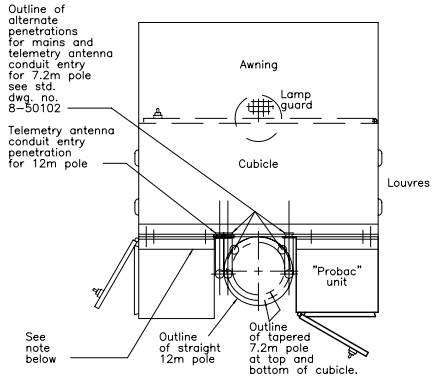

MOUNTING OPTIONS LEFT OR RIGHT SIDE

NOTE: If required "Probac" unit may be mounted to the left rear of switchboard if during fabrication of the unit the mounting angles are modified and penetrations for the pump unit and hoses are relocated to suit.

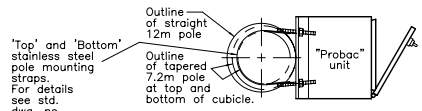

MOUNTING OPTION "PROBAC" UNIT ONLY

NOTE: If required "Probac" unit may be mounted directly on to vent pole for pump stations without pole mounted control cubicles.

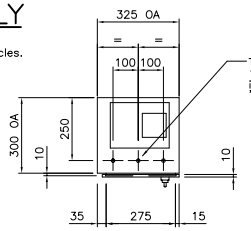

SECTION A–A

DOOR SHOWN FOR LOCKING DETAIL

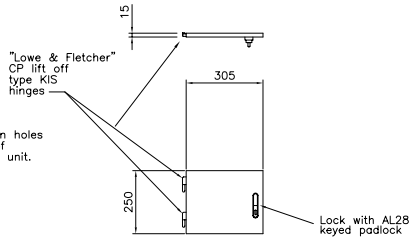

DOOR DETAIL

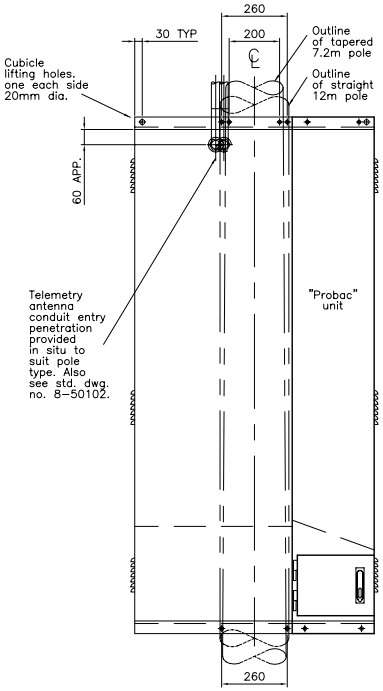

MOUNTING OPTIONS FRONT VIEW

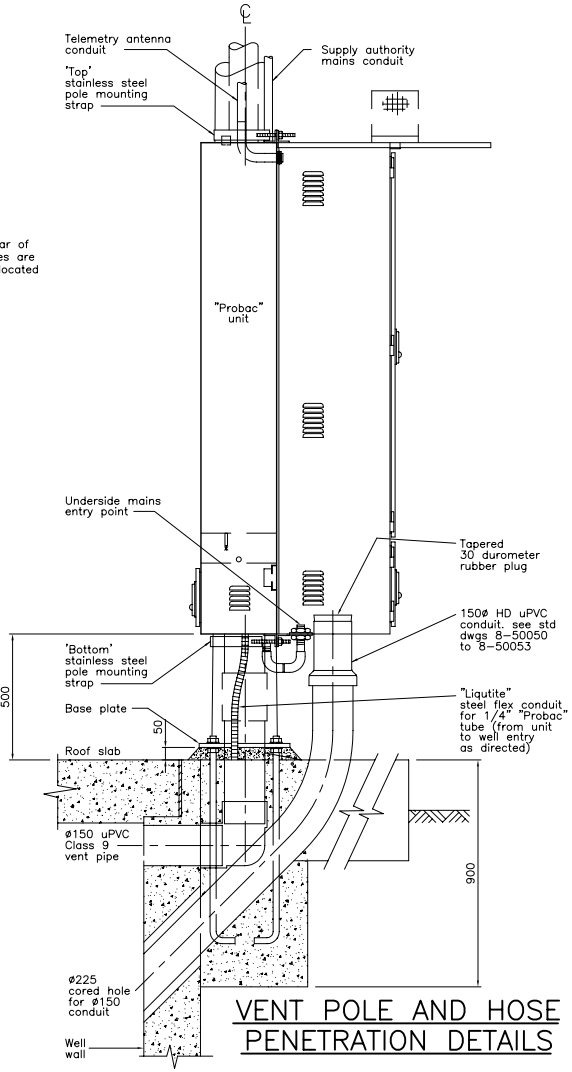

VENT POLE AND HOSE PENETRATION DETAILS

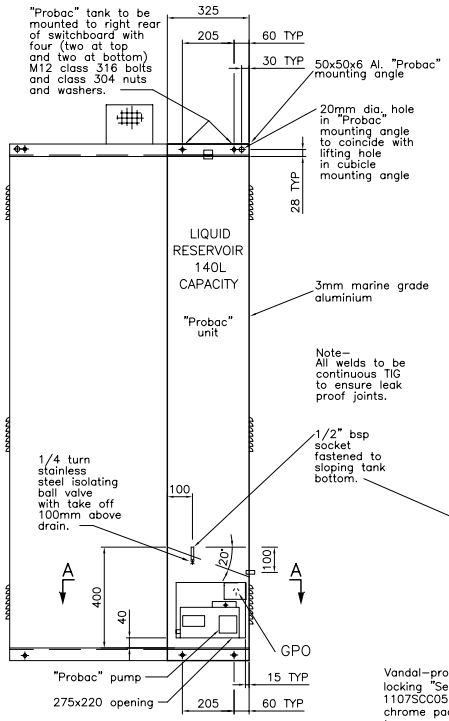

FRONT VIEW

DOOR NOT SHOWN FOR CLARITY

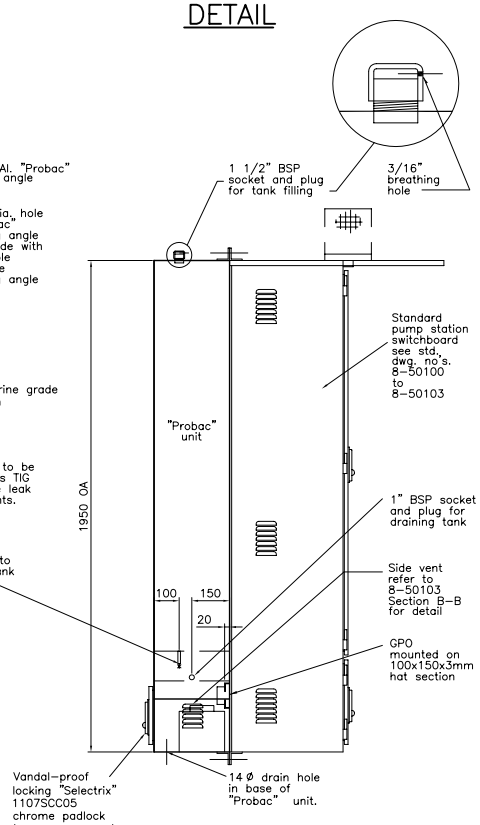

SIDE VIEW

DOOR SHOWN FOR LOCKING DETAIL

Revisions	Appd	Date
Original Issue		4/2000

Mayor _____
C.E.O. _____
Date _____

Director Works and Services
Drawn | Rec.
Checked | Approved
Disc.

Pine Rivers Shire Council
220 Gympie Road
Strathpine
PO Box 5070
Queensland 4500

PINE RIVERS

NOTE:– DRAWINGS ARE SUBJECT TO BE REVISED WITHOUT NOTICE. IT IS THE CONTRACTOR'S RESPONSIBILITY TO BASE WORK ON LATEST REVISIONS OF THE PINE RIVERS SHIRE COUNCIL STANDARD DRAWINGS.
CAD File Path :– I:\ACAD\STANDARD\CAT–5\8–50020.DWG

SEWERAGE PUMP STATION
STANDARD INSTALLATION UP TO 22kW "PROBAC" PUMP & TANK CONSTRUCTION/INSTALLATION

File No. 400/26
Min Page 00/1281
Standard Drawing No.
8 50020

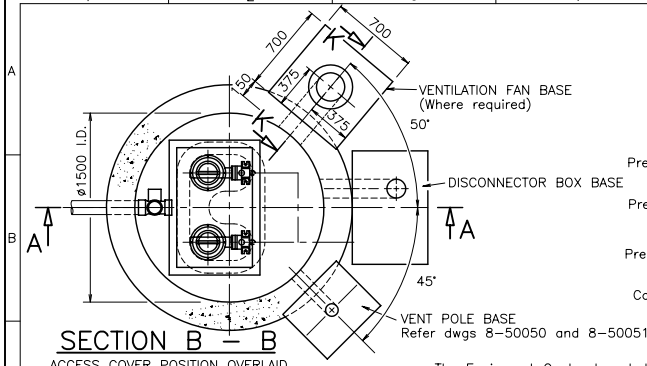

SECTION B – B

ACCESS COVER POSITION OVERLAID

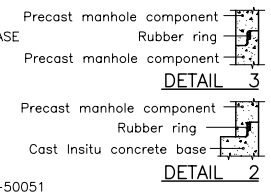

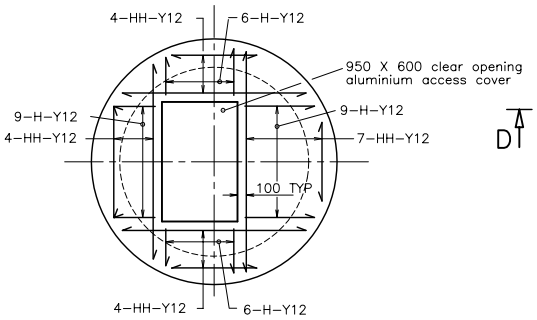

PLAN

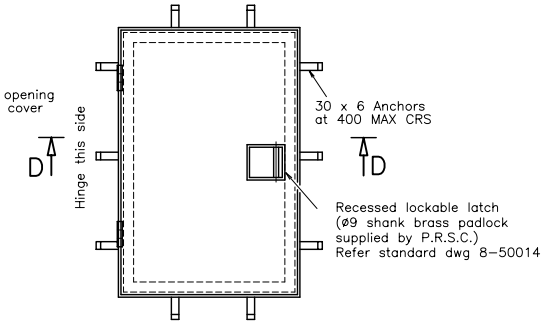

PLAN

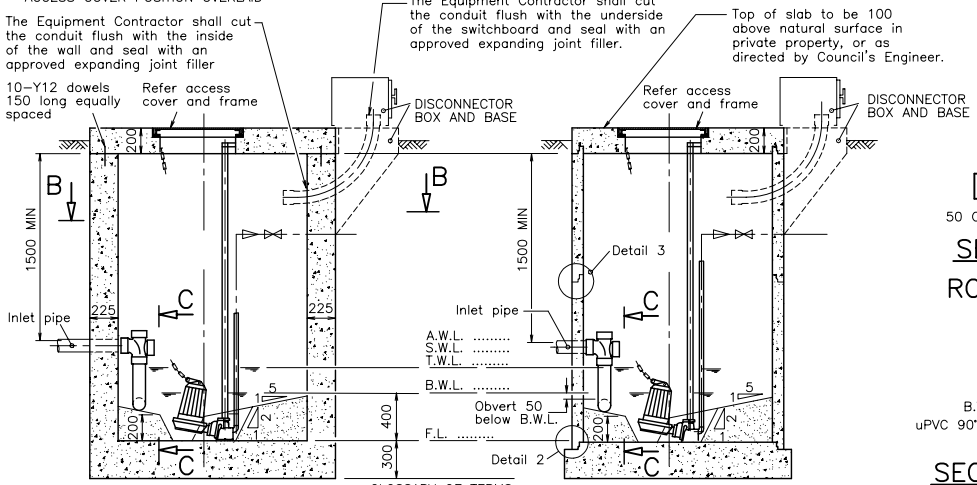

SECTION A – A

CAST INSITU PUMPWELL

GLOSSARY OF TERMS

A.W.L. = Alarm Water Level
S.W.L. = Standby Pump Start Level
T.W.L. = Duty Pump Start Level
B.W.L. = Pump Stop Level
F.L. = Floor Level

SECTION A – A

PRECAST PUMPWELL

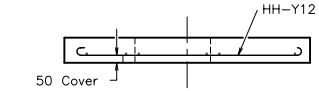

SECTIONAL ELEVATION

ROOF REINFORCEMENT

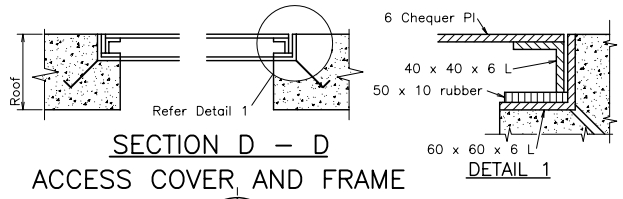

SECTION D – D

ACCESS COVER AND FRAME

DETAIL 1

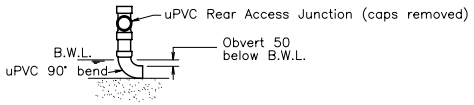

SECTION C – C

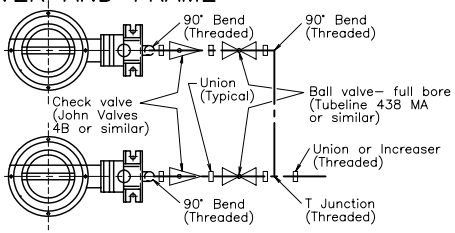

SCHEMATIC PIPE LAYOUT

M.D.P.E. PN 6.3 or similar approved

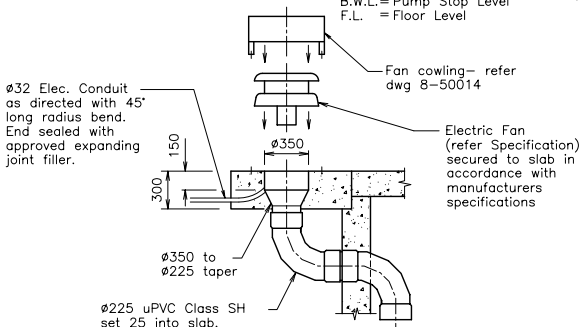

SECTION K – K

VENTILATION FAN (WHERE REQUIRED)

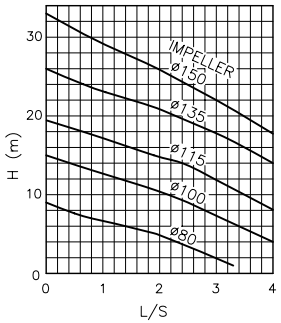

PERFORMANCE CURVE

K.S.B. AJAX PUMP S75–150 SERIES 3.0kW
T.L.C. DISCHARGE

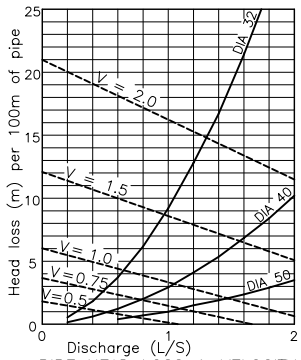

PIPE HEAD LOSS & VELOCITY

M.D.P.E. PN 6.3 PIPEWORK

NOTES

1. Concrete shall be
   (a) Class S32 for insitu concrete
   (b) Class S40 for pre–cast components
   both in accordance with AS 1379.
2. All fasteners excluding nuts shall be Grade 316 stainless steel. Nuts shall be Grade 304 stainless steel. Unless otherwise noted, fasteners shall be as described below.
   (a) Fixing to concrete – bolts shall be M16 Drop–in anchors. (Ramset Dynaset or similar)
   (b) Fixing to metalwork – bolts shall be M16 HEX head bolts.
3. Nylon or polythene separation inserts shall be used between stainless steel fasteners and aluminium sections.
4. Anti–galling lubricant "Loctite 222 or 567" or similar shall be used on all threads and between all stainless steel abutting surfaces
5. MDPE pipe cast into pumpwell wall shall be coated or sanded for the length of wall penetration to ensure bonding.
6. Unless noted otherwise angles, bars and tubes shall be aluminium alloy 6061 T6, plate shall be aluminium alloy 5083–H321.
7. Top of insitu base shall be profiled to suit the incoming precast manhole component.
8. Lifting chains shall be Grade L steel, hot dipped galvanised, tested and certified. Upon installation chains shall be made taut.
9. Refer to dwgs 8–50100 to 8–50103 for electrical installation details.
10. Access to Pumping Station is by means of hoist or portable ladder.
11. Install RPZ device to the water service– refer dwg 8–50017.
12. Steel Reinforcement shall comply with AS 4671

Revisions	Appd	Date
A Note 12 amended		2/05
Original Issue		09/96

Mayor _____
C.E.O. _____
Date _____

Director Assets & Infrastructure
Drawn | Rec.
Checked | Approved
Disc.

Pine Rivers Shire Council
220 Gympie Road
Strathpine
PO Box 5070
Queensland 4500

PINE RIVERS

AMENITIES BUILDING SEWAGE PUMPING STATION

File No. 400/26
Min Page
Standard Drawing No.
8 | 50021 | A

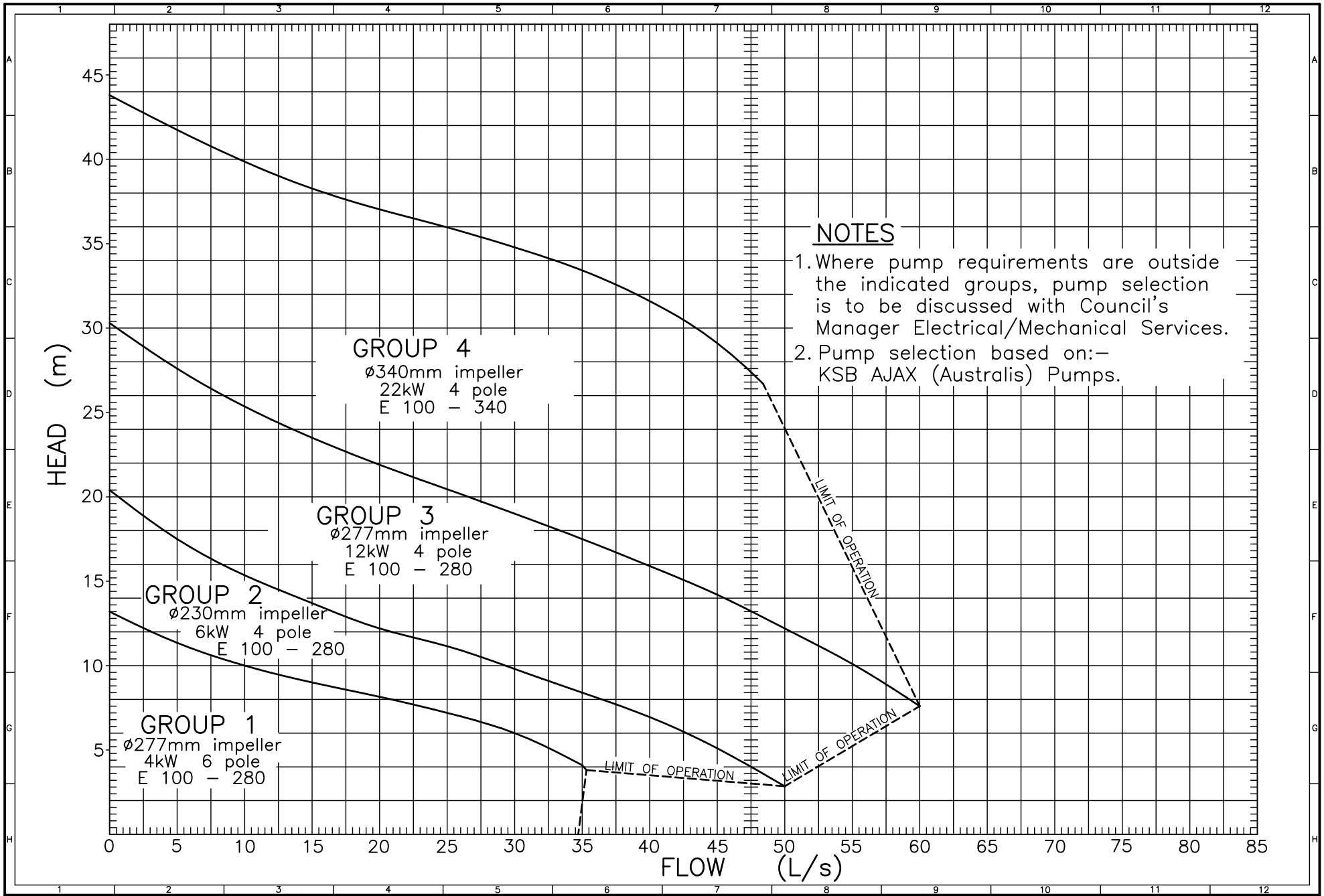

Revisions	Appd	Date
Original Issue		09/96

Mayor _____
C.E.O. _____
Date _____

Director Works and Services
Drawn | Rec.
Checked | Approved
Disc.

Pine Rivers Shire Council
220 Gympie Road
Strathpine
PO Box 5070
Queensland 4500

PINE RIVERS

SUBMERSIBLE SEWAGE PUMPING STATION
PUMP SELECTION CURVES

File No. 400/26
Min Page
Standard Drawing No.
8 50023

PUMPING STATION NUMBER	
TOTAL FUTURE EQUIVALENT TENEMENTS *	
PUMPING STATION LAYOUT TYPE	
INLET SEWER DIAMETER	
INVERT LEVEL OF INLET SEWER	
TOP WATER LEVEL + +	
BOTTOM WATER LEVEL + +	
CYLINDRICAL BASE CONSTRUCTION **	
CAISSON BASE CONSTRUCTION **	
THICKNESS OF FLOOR/CAISSON PLUG	
RL TOP OF STATION +	
RL FINISHED GROUND	
NOM RL VALVE PIT FLOOR +	
DISCHARGE PIPEWORK DIAMETER	
INVERT LEVEL OF DISCHARGE PIPE	
VENT POLE BASE (ATTACHED OR REMOTE)	
VENT POLE HEIGHT (7.2m, 12.0m)	
DISCONNECTOR BOX BASE (YES OR NO)	
OVERFLOW IL	
EST STORAGE TIME AT DESIGN FLOW (Hrs)	

SEPTIC CONTROL METHODS	
CHEMICAL INJECTION – TYPE	
DOSAGE	
PROVIDER (COMPANY NAME)	
OXYGEN INJECTION	
DOSAGE	
PROVIDER (COMPANY NAME)	
ORGANIC CONCENTRATE TYPE	
DOSAGE	
PROVIDER (COMPANY NAME)	
OTHER (SPECIFY)	
DETAILS	
DETAILS	

* Total future equivalent tenements to be served by this pumping station. Calculations to validate this information must be supplied with this completed sheet.

** Base construction type to be shown on this drawing shall be cylindrical or caisson.

+ Depth from Top of Station to Valve Pit Floor shall be not less than 2.250m.

+ + Operating depth shall be 200 MIN

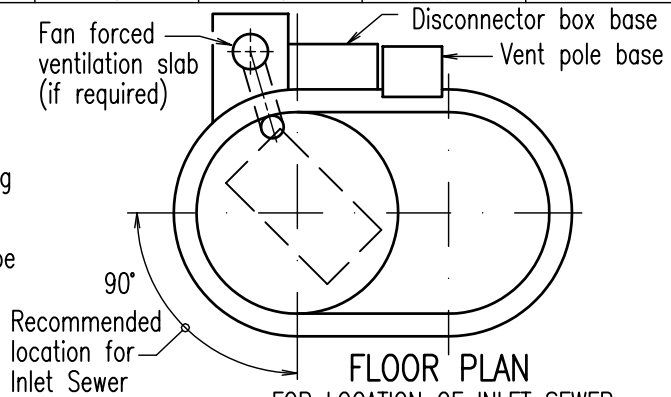

FLOOR PLAN
FOR LOCATION OF INLET SEWER

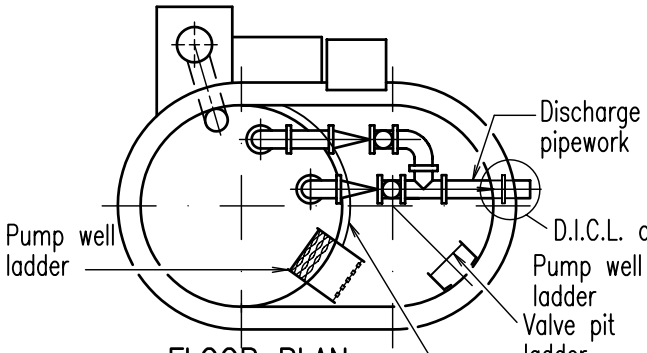

FLOOR PLAN
PUMPING STATION LAYOUT TYPE A

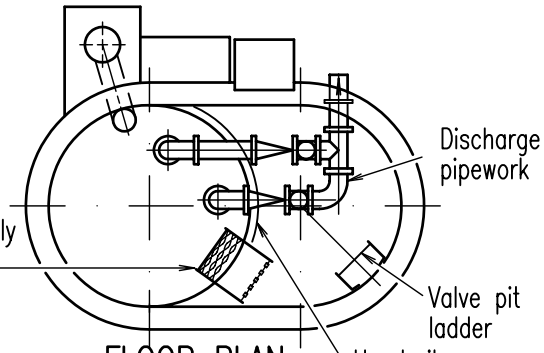

FLOOR PLAN
PUMPING STATION LAYOUT TYPE C

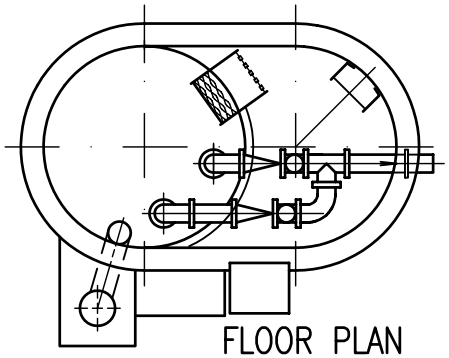

FLOOR PLAN
PUMPING STATION LAYOUT TYPE B

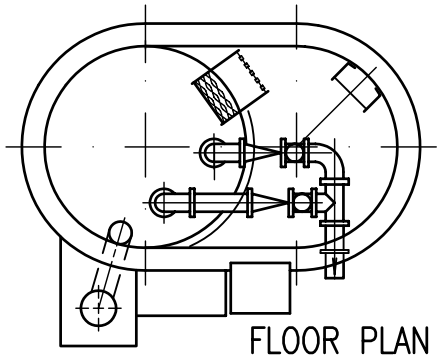

FLOOR PLAN
PUMPING STATION LAYOUT TYPE D

Revisions	Appd	Date
Original Issue		09/96

Mayor _____
C.E.O. _____
Date _____

Director Works and Services
Drawn | Rec. | Checked | Approved | Disc.

Pine Rivers Shire Council
220 Gympie Road
Strathpine
PO Box 5070
Queensland 4500

PINE RIVERS

SUBMERSIBLE SEWAGE PUMPING STATION
DESIGNER INFORMATION

File No. 400/26
Min Page
Standard Drawing No.
8 50024

WELL DETAILS

Station Number _____
Location _____
_____
_____
Well Diameter _____
Pump Station Top (A) _____
Valve Pit Floor (C) _____
Pump Well Floor (D) _____
Inlet Sewer I.L. (E) _____
Pressure Main I.L. (B) _____
Pressure Main Diameter _____
Inlet Sewer Diameter _____
Overflow I.L. (OL) _____
Alarm Level (AL) _____
Standby Pump Start Level (SWL) _____
Duty Pump Start Level (TWL) _____
Pump Stop Level (BWL) _____
Design Inflow Rate L/sec (DIR) _____L/s
Estimated System Storage Between SWL and OL at DIR
Volume (Litres) _____L
Time (HRS/MIN) _____

PUMP DETAILS

Duty Point (L/sec & Head metres) _____ L/Sec @ _____ m HEAD
Shut off Head _____ m HEAD
Manufacturer _____
Model _____
Discharge size _____ mm ø
Discharge Style
Offset/Centre _____
Guide rail size _____
Shape of Guiderails
Square/Round _____
Number of Guiderails _____

Motor Rating
KW @ PF _____ KW @ _____ PF
Voltage/Number Of Phases _____ VOLTS _____ PHASE
Number of Poles _____ POLE
Full Load Current _____ _____ AMPS
Thermal O.L./CEF./CET. Type/Setting _____ _____ AMPS
Contactor Type/Rating _____ _____ AMPS
Fuse Type/Rating _____ _____ AMPS
CB Type/Rating _____ _____ AMPS

Motor Cable
Core Size _____ mm^2
Number of Cores/Phase _____ cores/phase
Thermister Cable Included YES / NO

PRSC Pump Number Position 1 _____
Manufacturers Serial No. _____
PRSC Pump Number Position 2 _____
Manufacturers Serial No. _____

System Resistance Curve Attached YES / NO
Pump Performance Curve Attached YES / NO

SEPTIC CONTROL

CHEMICAL INJECTION
Chemical Type _____
Dosage Rate _____
Provider (Company Name) _____

OXYGEN INJECTION
Dosage _____
Provider (Company Name) _____

ORGANIC CONCENTRATE
Organic Type _____
Dosage _____
Provider (Company Name) _____

OTHER (specify) _____
Details _____
Details _____

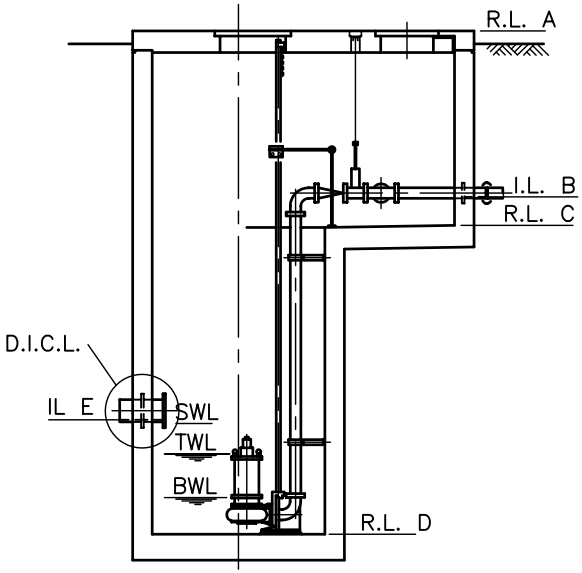

Refer dwg 8–50015 for other details.

SWITCHBOARD DETAILS

KW Rating _____KW
Electrical Mains Size _____mm^2

FAN DETAILS (if required)

Manufacturer/Model _____
Manufacturers Serial No. _____
Motor Rating
KW @ PF _____KW @ _____PF
Motor Cable
Core Size _____mm^2

Revisions	Appd	Date
Original Issue		09/96

Mayor _____
C.E.O. _____
Date _____

_____
Director Works and Services
Drawn | Rec.
Checked | Approved
Disc.

Pine Rivers Shire Council
220 Gympie Road
Strathpine
PO Box 5070
Queensland 4500

PINE RIVERS

SUBMERSIBLE SEWAGE PUMPING STATION
AS CONSTRUCTED DETAILS

File No. 400/26
Min Page
Standard Drawing No. 8 50025

NOTES

1. Manholes shall generally be constructed as SEWER MANHOLES TYPE 1
2. CORROSION PROTECTION OF MANHOLE – Alternatives:–
   (a) A fabricated manhole liner (walls and top only) of polyethylene shall be placed before the wall and top slab of the manhole is poured. Black Brute Manhole Unit or similar.
   (b) An alternative method of corrosion protection approved by council.
3. The manhole and vent pole base shall be constructed N32 concrete in accordance with AS 1379
4. Precast Manholes are not to be used.
5. MANHOLE ACCESS
   (a) Step irons:– Refer Standard drawing 8–50002 for details.
   (b) Ladder constructed from grade 6061–T6 aluminium. Refer Standard Drawing 8–50041.
6. Backfill in vent pipe trench shall be generally in accordance with Standard Drawing 8–50008.
7. Unless noted otherwise, steelwork shall be hot dip galvanised after fabrication.
8. Nylon or polythene separation inserts shall be used between stainless steel fasteners and aluminium sections.
8. All fasteners excluding nuts shall be Grade 316 stainless steel. Nuts shall be Grade 304 stainless steel. Unless otherwise noted, fasteners shall be as described below.
   (a) Fixing to concrete – bolts shall be M16 Drop–in anchors. (Ramset Dynaset or similar)
   (b) Fixing to metalwork – bolts shall be M16 HEX head bolts.
10. Anti–galling lubricant "Loctite 222 or 567" or similar shall be used on all threads and between all stainless steel mating surfaces
11. Approved sealants, sealing rings and waterstop materials shall be placed in joints between the manhole top and wall, wall sections, pipe connections into manholes to ensure the chamber is watertight and will pass the vacuum test.
12. Sewerage systems are to be vacuum tested in accordance with Pine Rivers Shire Council Specifications.

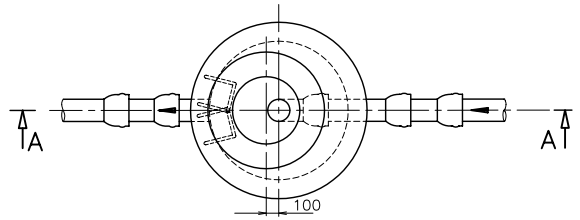

PLAN

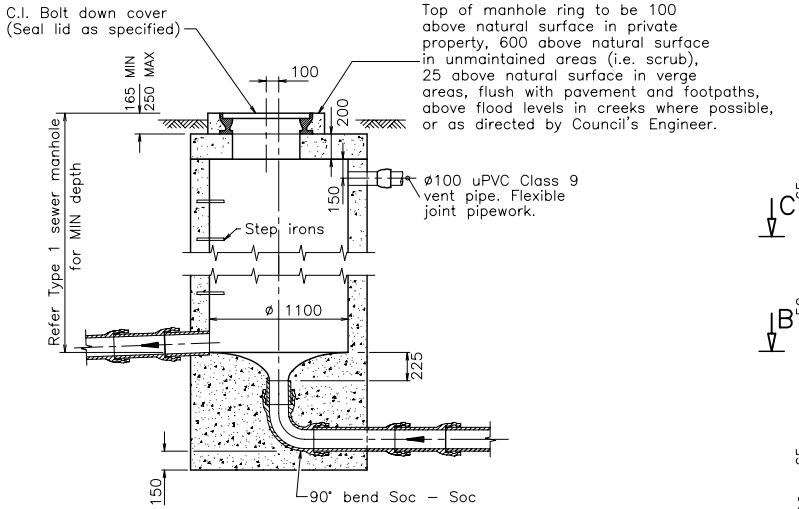

SECTION A – A

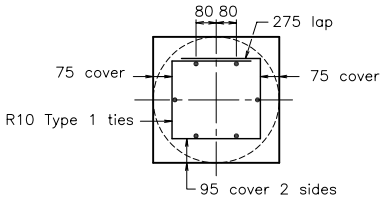

SECTION C – C

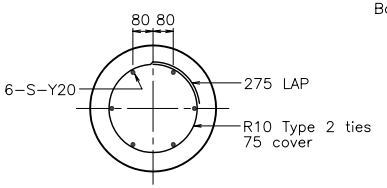

SECTION B – B

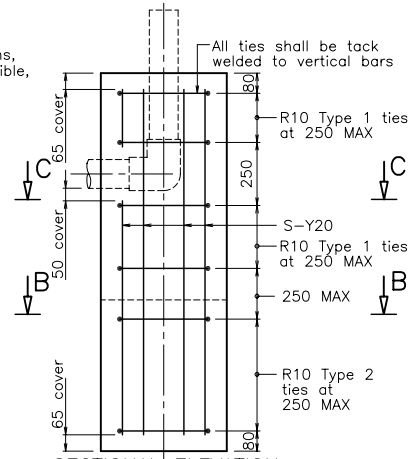

SECTIONAL ELEVATION

REINFORCEMENT DETAILS

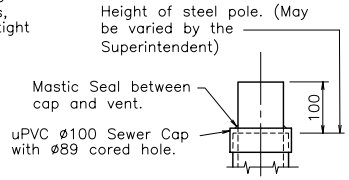

DETAIL 1

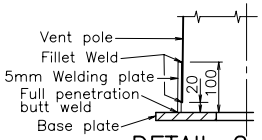

DETAIL 2

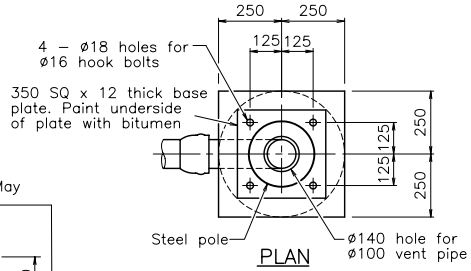

PLAN

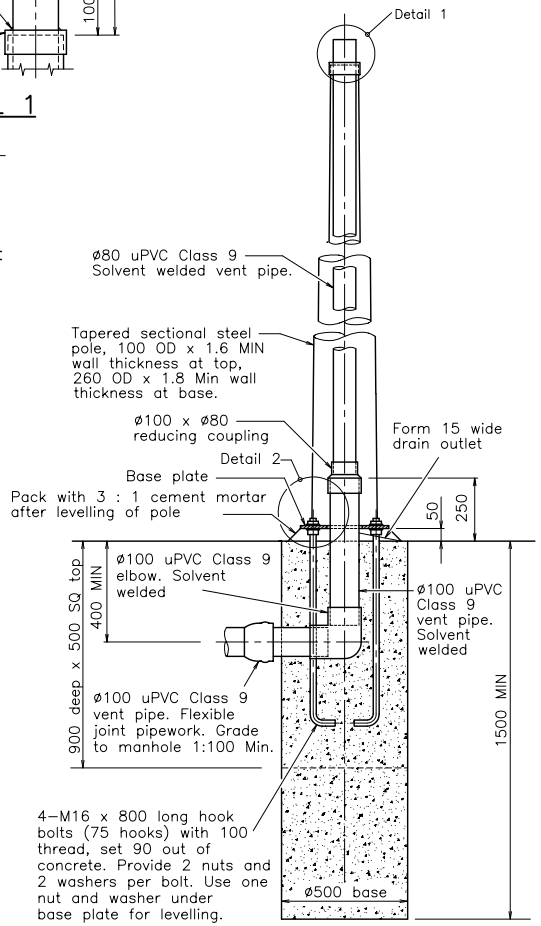

SECTIONAL ELEVATION

7.2m VENTPOLE DETAILS

Revisions	Appd	Date
Original Issue – Re–numbered from 8–50005A		02/01

Mayor _____
C.E.O. _____
Date _____

Director Works and Services
Drawn | T.T. | Rec.
Checked | L.Mc. | Approved
Disc.

Pine Rivers Shire Council
220 Gympie Road
Strathpine
PO Box 5070
Queensland 4500

PINE RIVERS

PRESSURE MAIN DISCHARGE MANHOLE

File No. 400/26
Min Page 01/0436
Standard Drawing No. 8 50026

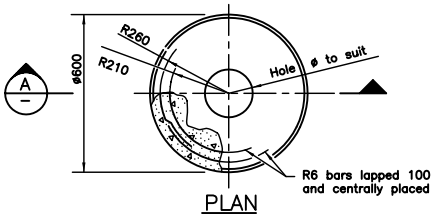

PLAN

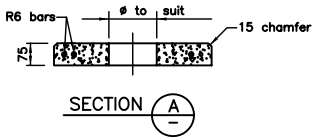

MARGIN SLAB

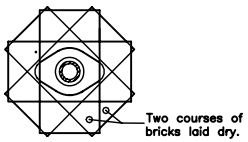

SET OUT OF BRICKS

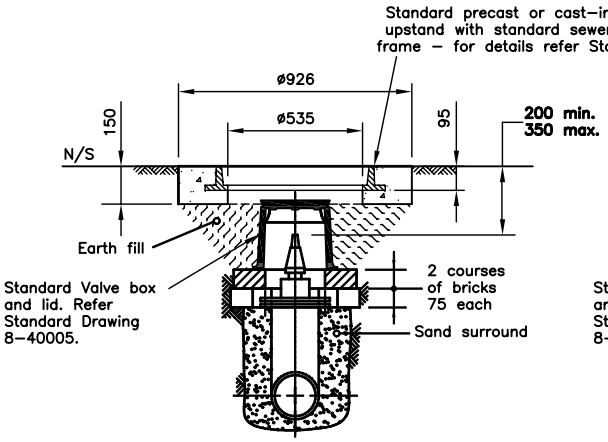

SLUICE VALVE

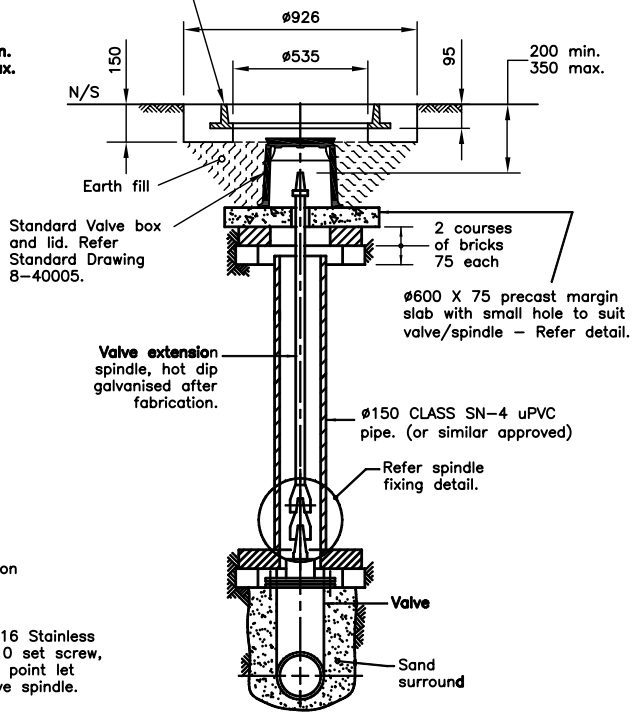

VALVE EXTENSION SPINDLE

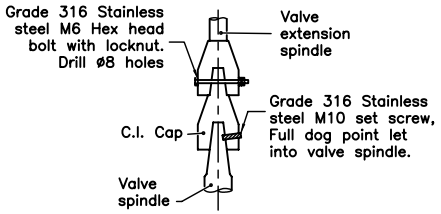

SPINDLE FIXING DETAIL UNDERGROUND

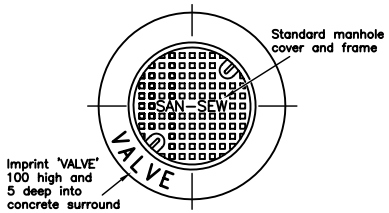

COVER AND SURROUND

NOTES

1. Concrete shall be Class N-25 to AS 1379.
2. Valve boxes and covers are to be in accordance with PRSC Standard drawing 8-40005.
3. Cast iron and concrete filled manhole covers and frames to be in accordance with Standard Drawing 8-50007.
4. Valves are to comply with AS 2638, and are to be coated with a thermal bonded polymeric coating to AS/NZS 4158.
5. All valves are to actuate anti-clockwise to close.
6. All bolts, nuts and washers to be stainless steel to AS 1449. Bolts and washers to be grade 316. Nuts to be grade 304.
7. All galvanising is to comply with AS/NZS 4680.
8. Al reinforcing bars to comply with AS 4671.
9. All dimensions are in millimeters.

Revisions	Appd	Date
A Notes 1 and 8 amended		2/05
Original Issue		02/01

Mayor _____
C.E.O. _____
Date _____

Director Assets & Infrastructure
Drawn J.C. Rec.
Checked T.T. Approved
Disc.

Pine Rivers Shire Council
220 Gympie Road
Strathpine
PO Box 5070
Queensland 4500

PINE RIVERS

SEWER VALVE INSTALLATION DETAILS

File No. 400/26
Min Page
Standard Drawing No. 8 50027 A

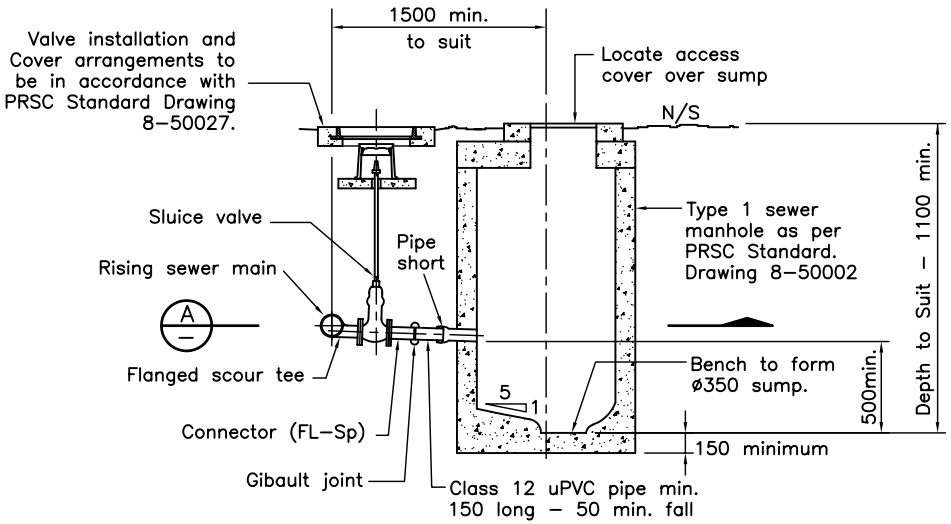

CONNECTION INTO NON–RETICULATION SEWER

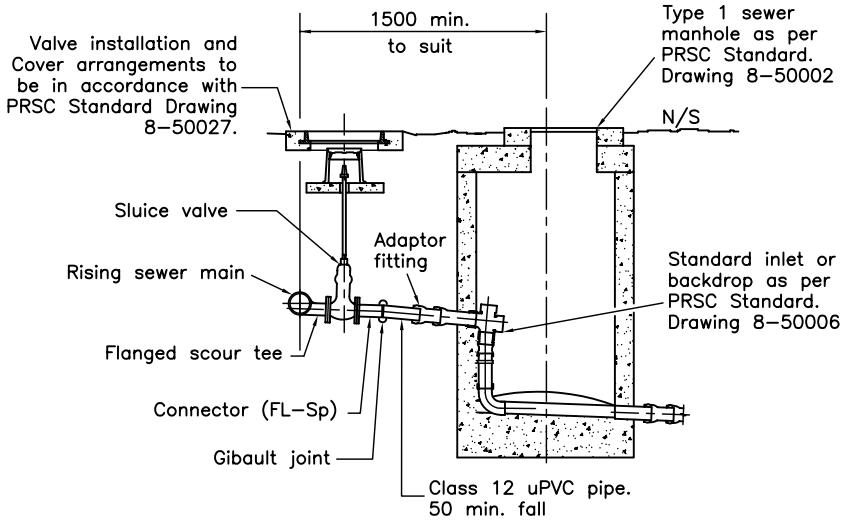

CONNECTION INTO RETICULATION SEWER

SCOUR DISCHARGE DETAILS

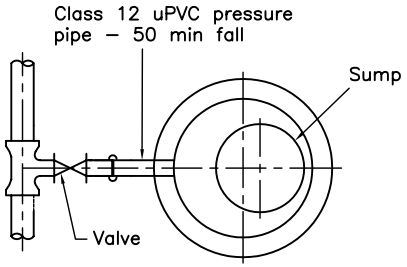

SECTION A

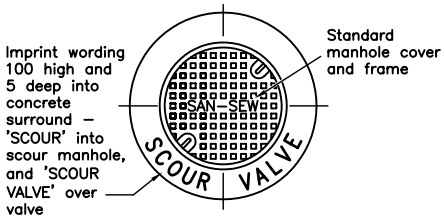

COVER AND SURROUND
VALVES AND NON–RETICULATION MANHOLE

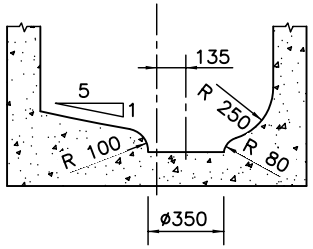

SUMP DETAIL
NON RETICULATION MANHOLE

NOTES

1. Where possible, scour outlet is to be connected to a reticulation manhole.
2. General concrete works (other than manhole) to be Class N–20 in accordance with AS 1379 and AS 3600.
3. For details on installation of valves refer to PRSC Standard Drawing 8–50027.
4. Provide a fine non–slip surface with a wood float to the top surface of all walls.
5. Pressure pipes are Class 12 minimum. Pipe Class and diameters to be chosen to suit specific design requirements.

Revisions	Appd	Date
Original Issue		02/01

Mayor _____
C.E.O. _____
Date _____

Director Works and Services
Drawn J.C. Rec.
Checked T.T. Approved
Disc.

Pine Rivers Shire Council
220 Gympie Road
Strathpine
PO Box 5070
Queensland 4500

PINE RIVERS

SEWER RISING MAIN
SCOUR DISCHARGE DETAIL

File No. 400/26
Min Page 01/0436
Standard Drawing No.
8 50028

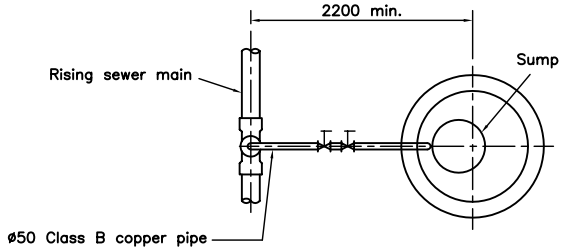

SECTION A

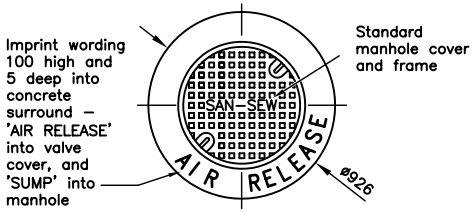

COVER AND SURROUND
VALVES AND NON–RETICULATION MANHOLE

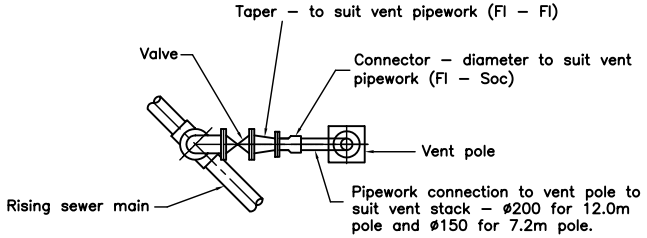

PLAN

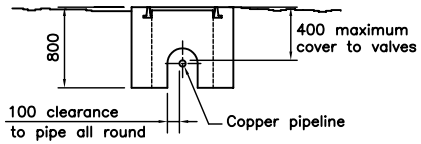

SECTION B

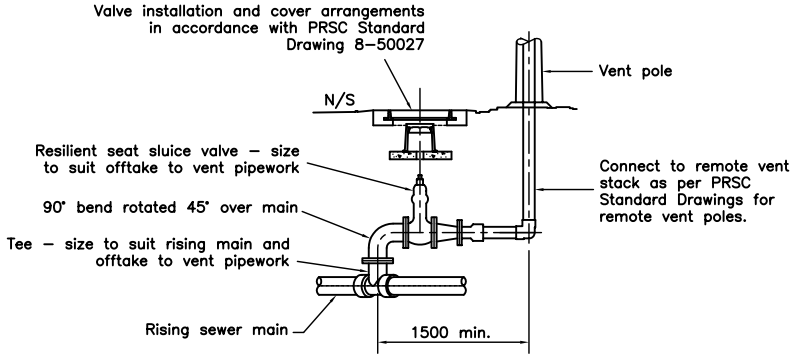

ELEVATION

VENT POLE PIPEWORK CONNECTION DETAIL

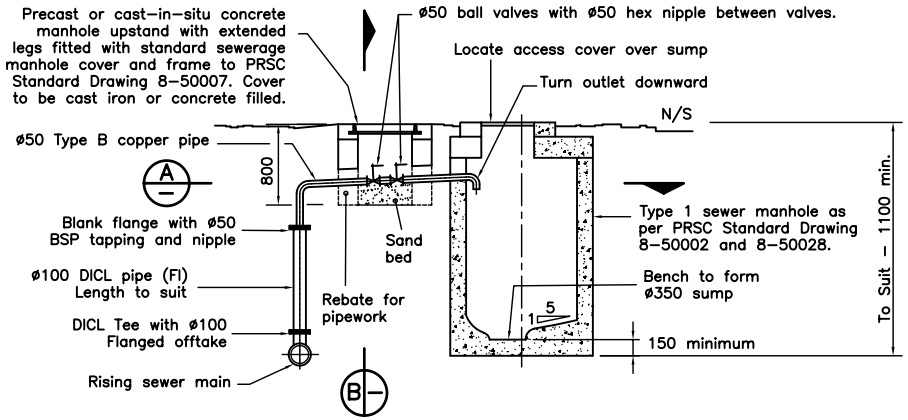

ELEVATION

MANUAL AIR RELEASE DETAIL

DETAIL SHOWS DISCHARGE INTO A REMOTE MANHOLE. AIR RELEASE IS TO BE LET INTO A RETICULATION MANHOLE IF AVAILABLE, TO A SIMILAR DETAIL

NOTES

1. General concrete works (other than manhole) to be Class N–25 in accordance with AS 1379 and AS 3600.
2. Provide a fine non–slip surface with a wood float to the top surface of all walls.
3. For details on installation of Sluice Valves and covers refer to PRSC Standard Drawing 8–50027.
4. Pipework from rising main shall maintain a rising grade to vent or outlet of manual release.
5. Ball valves to be in accordance with AS 1628, and of bronze or stainless steel body with stainless steel ball and PTFE seat. Actuation shall be by handwheel or lever. Model and specifications for ball valves to be approved by Council's Engineer before installation.
6. Copper pipework to be Type B. All fittings to be brass or silver soldered copper, Type B de–zincification resistant to AS 1565

Revisions	Appd	Date
A Note 1 amended		2/05
Original Issue		02/01

Mayor _____
C.E.O. _____
Date _____

Director Assets & Infrastructure
Drawn J.C. Rec.
Checked T.T. Approved
Disc.

Pine Rivers Shire Council
220 Gympie Road
Strathpine
PO Box 5070
Queensland 4500

PINE RIVERS

SEWER RISING MAINS MANUAL AIR RELEASE AND VENT CONNECTION DETAILS

File No. 400/26 | Min Page
Standard Drawing No.
8 | 50029 | A

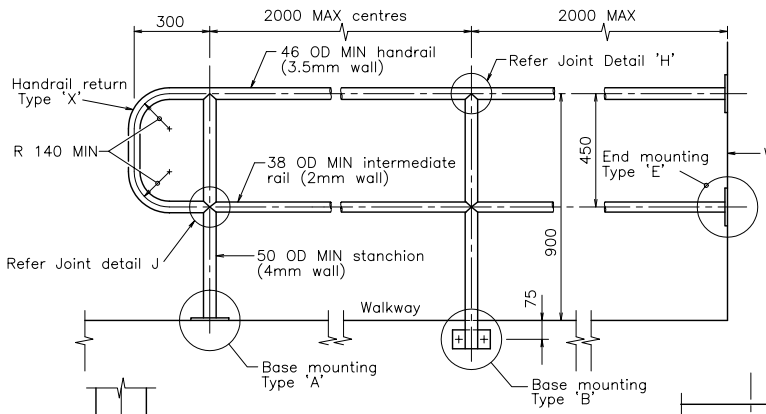

HANDRAIL FOR WALKWAYS

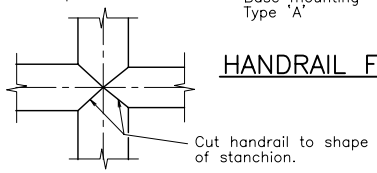

JOINT DETAIL 'J'

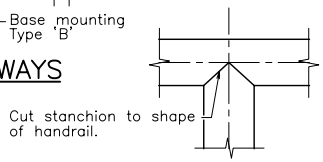

JOINT DETAIL 'H'

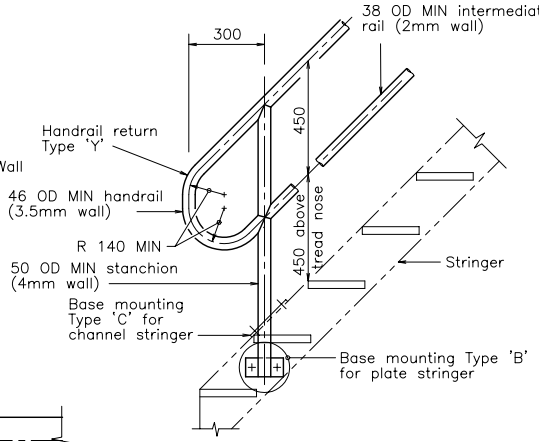

HANDRAIL FOR STAIRWAYS

NOTES

1. All handrail components shall be fabricated from aluminium Grade 6061 – T6 unless otherwise noted and shall comply with the design and material requirements of AS 1657.
2. Grind off all sharp edges after fabrication.
3. All fasteners excluding nuts, shall be Grade 316 stainless steel. Nuts and washers shall be Grade 304 stainless steel. Unless otherwise noted, fasteners shall be as described below.
   (a) Fixing to concrete – bolts shall be M16 Drop–in anchors. (Ramset Dynaset or similar)
   (b) Fixing to metalwork – bolts shall be M16 HEX head bolts.
4. Nylon or polythene separation inserts shall be used between stainless steel fasteners and aluminium sections. Hole diameter to suit these inserts. Refer Bolting Detail.
5. Anti–galling lubricant "Loctite 222 or 567" or similar approved shall be used on all threads and between all stainless steel mating surfaces.
6. Unless noted otherwise, all metalwork connections shall be welded as follows:
   (a) All welding to be weld quality B in accordance with AS 1665.
   (b) All welds to be 4mm fillet all round using Filler Alloy 5356.
7. Where joints in handrails and intermediate rails are necessary they shall be welded on site in a manner approved by the superintendent. Slip joints will not be accepted unless specifically noted to the contrary on the job drawings.
8. 3mm H.D.P.E. gaskets shall be placed between all aluminium mounts and other surfaces to prevent direct contact.
9. Kick plates, where required by AS 1657, shall comply with that code.

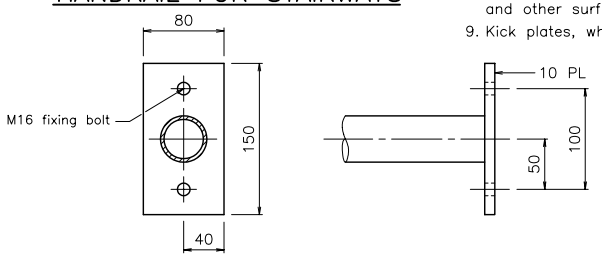

LEFT SIDE ELEVATION

FRONT SIDE ELEVATION

TYPE 'E' WALL MOUNTING

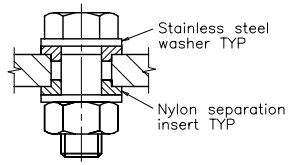

TYPICAL BOLTING DETAIL

SHOWING SEPARATION INSERT

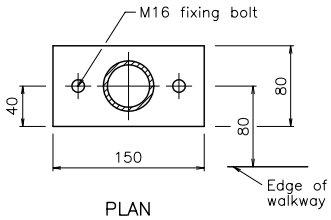

PLAN

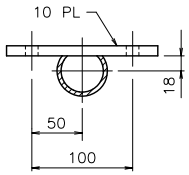

PLAN

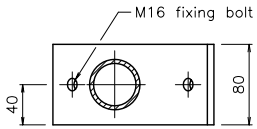

PLAN

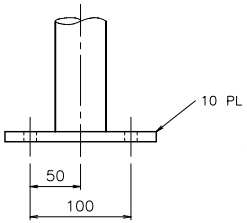

ELEVATION

TYPE 'A' TOP MOUNTED HANDRAIL

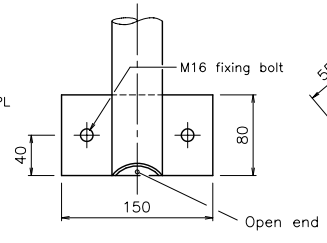

ELEVATION

TYPE 'B' SIDE MOUNTED HANDRAIL

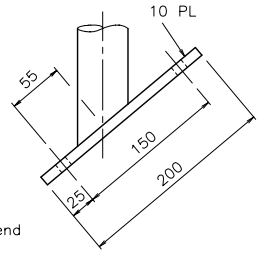

ELEVATION

TYPE 'C' TOP MOUNTED HANDRAIL ON ANGLE

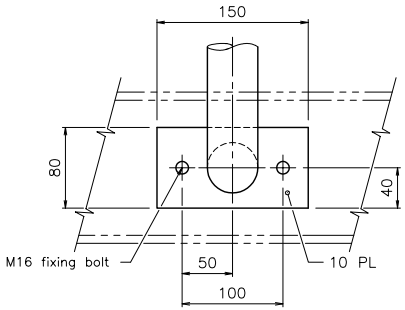

ELEVATION

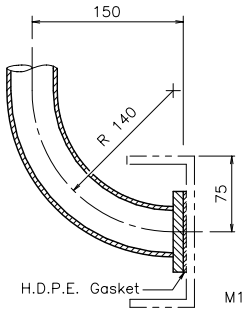

SECTIONAL ELEVATION

TYPE 'D' SIDE MOUNTED HANDRAIL

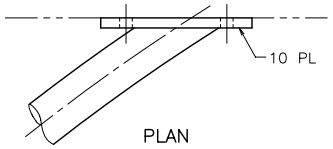

PLAN

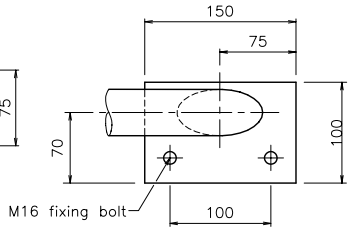

ELEVATION

TYPE 'F' CIRCULAR HANDRAIL WALL MOUNTING

Revisions	Appd	Date
Original Issue – Re-numbered from 8-50011		02/01

Mayor _____
C.E.O. _____
Date _____

Director Works and Services

Drawn	T.T.	Rec.	
Checked	L.Mc.	Approved	
Disc.			

Pine Rivers Shire Council
220 Gympie Road
Strathpine
PO Box 5070
Queensland 4500

PINE RIVERS

ALUMINIUM HANDRAILS

File No. 400/26
Min Page 01/0436
Standard Drawing No. 8 50040

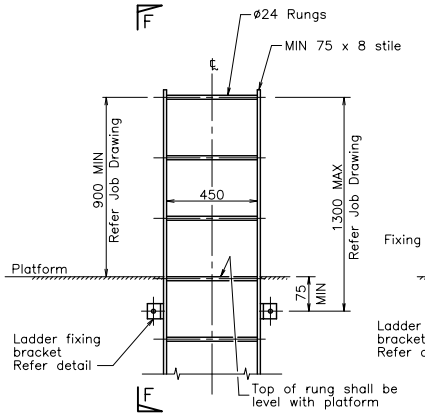

FRONT ELEVATION

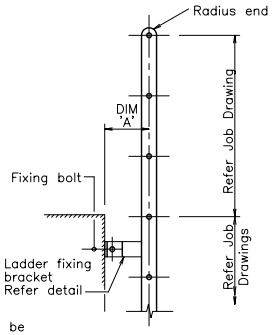

SIDE ELEVATION (F – F)

TYPE 'A' LADDER TOP (SIDE ACCESS)

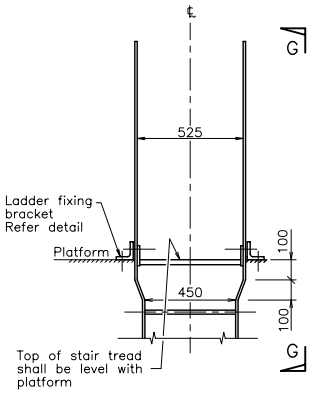

FRONT ELEVATION

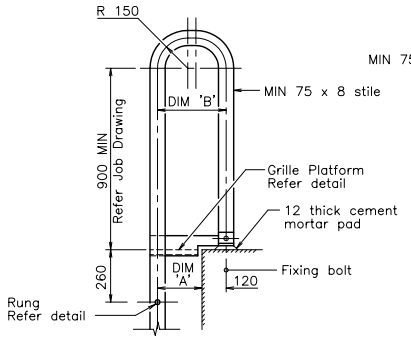

SIDE ELEVATION (G – G)

TYPE 'B' LADDER TOP

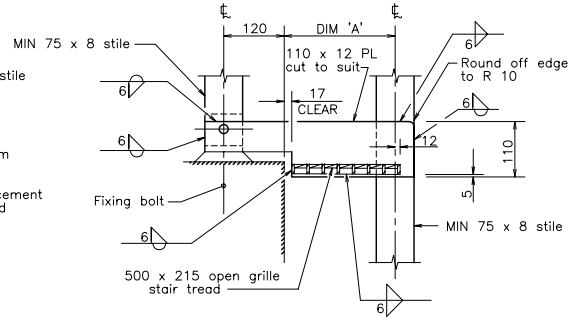

SECTIONAL ELEVATION (K – K)

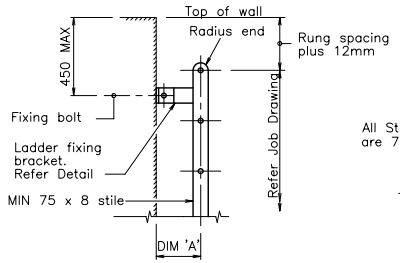

TYPE 'C' LADDER TOP RUNG DETAIL

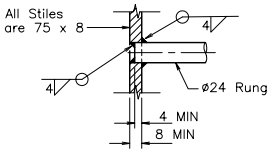

RUNG FIXING DETAIL

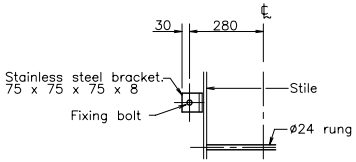

FRONT ELEVATION

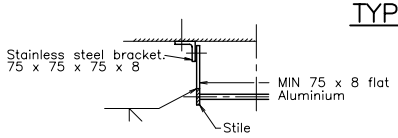

PLAN

LADDER FIXING BRACKETS

MAX 1800 VERTICAL SPACINGS

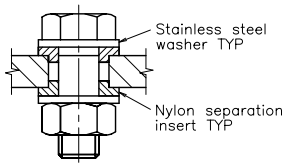

TYPICAL BOLTING DETAIL

SHOWING SEPARATION INSERT

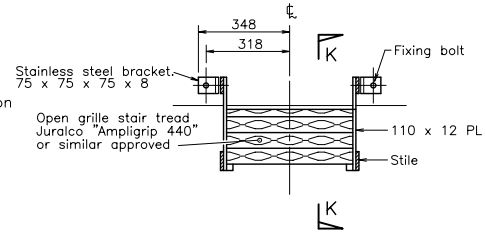

PLAN

LADDER TYPE 'B' GRILLE PLATFORM

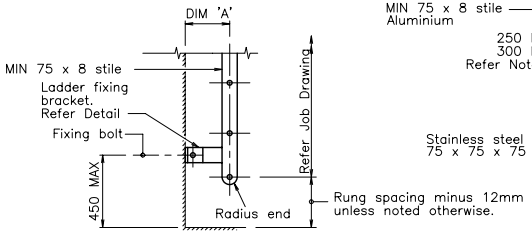

SIDE ELEVATION

TYPE 'D' LADDER BASE

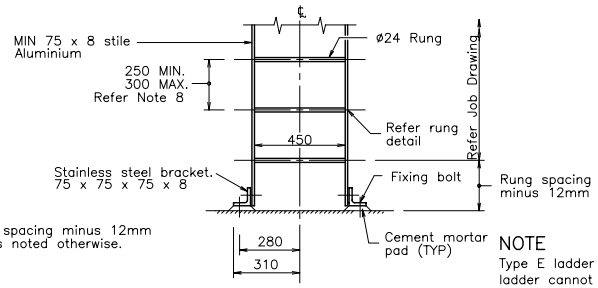

FRONT ELEVATION

TYPE 'E' LADDER BASE

NOTE

Type E ladder shall be used when the ladder cannot be fixed to a vertical face or wall. The Type E ladder base is not to be used in an internal situation.

NOTES

1. All ladder components shall be fabricated from Grade 6061–T6 aluminium and shall be secured by use of Grade 316 stainless steel brackets. (Refer ladder fixing bracket detail)
2. Grind off all sharp edges after fabrication.
3. All connections unless noted otherwise shall be welded as follows:–
   (a) All welding shall be weld quality 'B' in accordance with AS1665
   (b) All welds shall be 6mm fillet all round using filler alloy 5356
4. All fasteners excluding nuts shall be Grade 316 stainless steel. Nuts shall be Grade 304 stainless steel. Unless otherwise noted, fasteners shall be as described below.
   (a) Fixing to concrete – bolts shall be M16 Drop–in anchors. (Ramset Dynaset or similar.)
   (b) Fixing to metalwork – bolts shall be M16 HEX head bolts.
5. Anti–galling lubricant "Loctite 222 or 567" or similar shall be used on all threads and between all stainless steel mating surfaces.
6. Provide approved nylon or polythene separation inserts between all stainless steel anchors and aluminium sections.
7. 3mm H.D.P.E. gaskets shall be placed between all aluminium mounts and other surfaces to prevent direct contact.
8. Ladder rung spacing shall be a minimum of 200mm for ladders less than 1500 long.
9. DIM 'A' shall be 220mm unless shown otherwise on Job Drawing.
10. DIM 'B' shall be 340mm unless shown otherwise on Job Drawing.

Revisions	Appd	Date
Original Issue – Re–numbered from 8–50012		02/01

Mayor _____
C.E.O. _____
Date _____

Director Works and Services

Drawn	T.T.	Rec.	
Checked	L.Mc.	Approved	
Disc.			

Pine Rivers Shire Council
220 Gympie Road
Strathpine
PO Box 5070
Queensland 4500

PINE RIVERS

ALUMINIUM LADDERS

File No. 400/26
Min Page 01/0436
Standard Drawing No. 8 50041

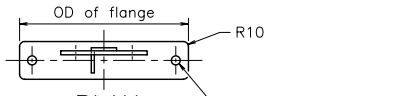

PLAN

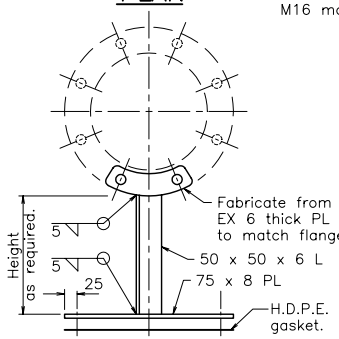

VALVE SUPPORT (ALUMINIUM)

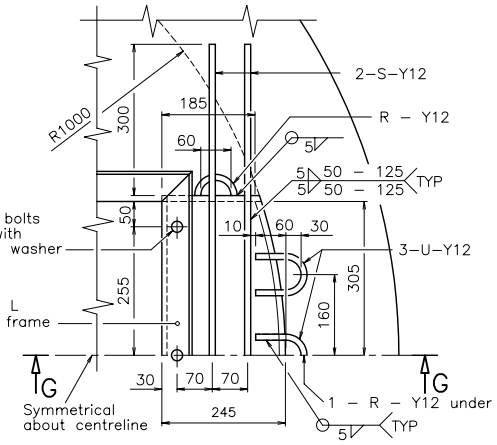

HALF SECTION F – F

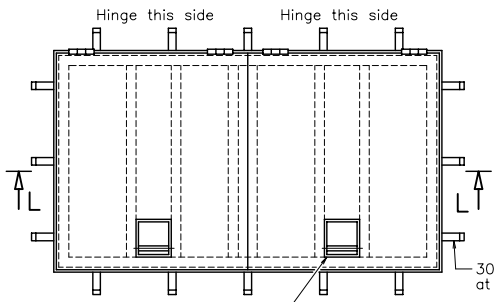

PLAN

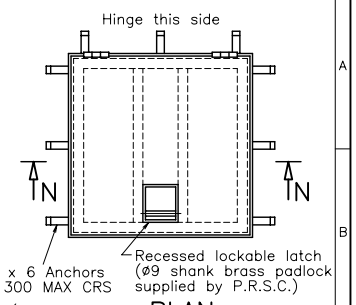

PLAN

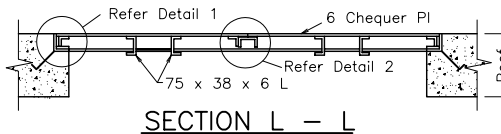

SECTION L – L

PUMP ACCESS COVER AND FRAME

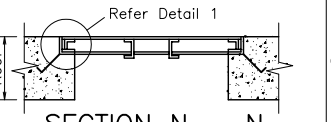

SECTION N – N

ACCESS MANHOLE COVER AND FRAME

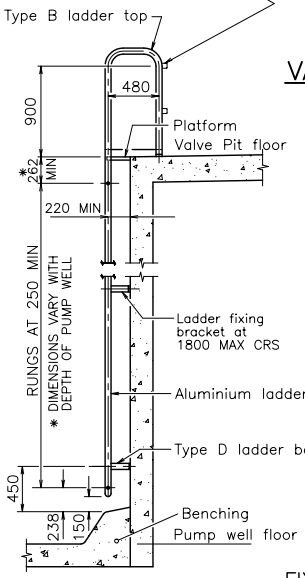

SECTION C – C

PUMP WELL LADDER

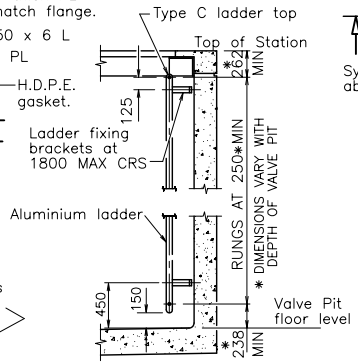

VALVE PIT LADDER

Safety chain brackets on opposite stile. Fixing chain brackets this stile. Provide 6mm short link Grade 316 stainless steel safety chains fixed to brackets as per Sections X – X

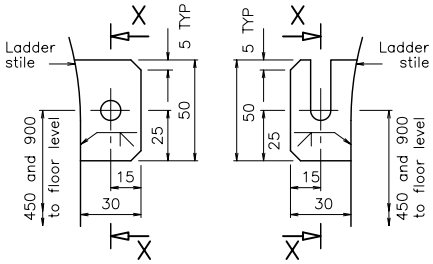

SAFETY AND FIXING CHAIN BRACKET – 2 OFF BOTH

EX 6 THICK ALUMINIUM PLATE

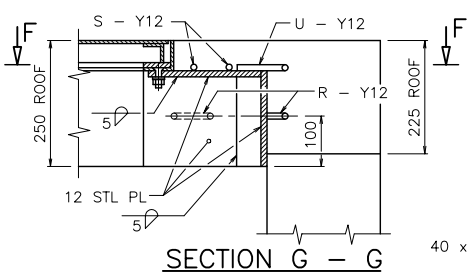

SECTION G – G

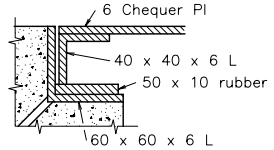

DETAIL 1

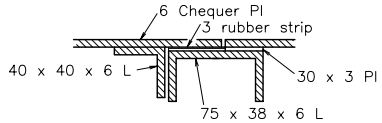

DETAIL 2

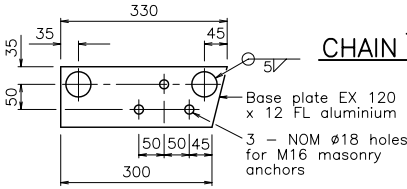

SECTION E – E

1 OFF AS DRAWN, 1 OFF OPPOSITE HAND

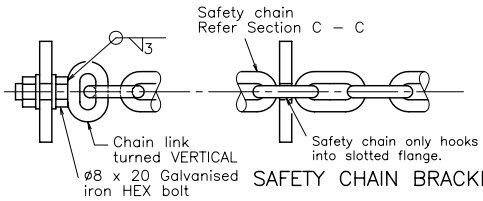

FIXING CHAIN BRACKET – 2 OFF

SAFETY CHAIN BRACKET – 2 OFF

SECTION X – X

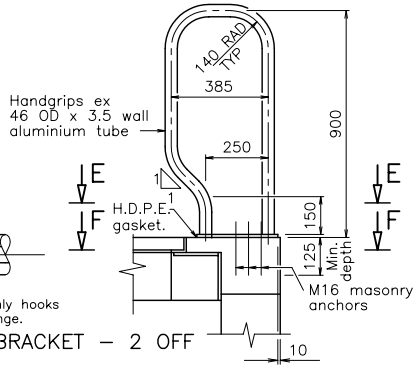

SECTION D – D

NOTES

1. Ladders, handrails and hand grips shall be constructed generally as shown and shall comply with AS 1657. Pay special attention to Clause 5.2. Aluminium plate shall be alloy 5083–H321, aluminium tubes shall be alloy 6061.T6. 3mm H.D.P.E. gaskets shall be placed between all aluminium mounts and other surfaces.
2. All fasteners excluding nuts shall be Grade 316 stainless steel.
   Nuts shall be Grade 304 stainless steel.
   Where handrails and ladders are fixed to concrete the fastener shall be either:
   a) M16 x 150 MIN long HEX bolt projecting 50mm from concrete, fitted with nut and washer.
   b) M16 Drop–in anchor (Ramset Dynaset or similar).
3. Unless noted otherwise, steelwork shall be hot dip galvanised after fabrication
4. The covers shall be gastight similar to those produced by Hallco Engineering and shall incorporate a recessed lockable latch which provides a positive pressure along the full length of the frame seals when closed by means of mechanical advantage. Full details of the latch arrangement shall be submitted to the superintendent for approval prior to fabrication. An inbuilt safety catch stay capable of securing the cover in the open position, shall be incorporated. All components of access covers and frames shall be fabricated from aluminium alloy 6061.T6. Refer standard drawing 8–50043.
   All embedded surfaces shall be painted with two coats of alkali resistant bituminous paint. The covers shall be designed as a platform in accordance with AS 1657. Fabrication details shall be submitted to the Superintendent for approval prior to manufacture.
5. If covers are subject to vehicular loading, use appropriately rated CI covers.
6. Nylon or polythene separation inserts shall be used between stainless steel fasteners and aluminium sections.
7. Anti–galling lubricant "Loctite 222 or 567" or similar shall be used on all threads and between all stainless steel mating surfaces
8. All chains shall be Grade L steel, hot dipped galvanised, tested and certified.

Revisions	Appd	Date
Original Issue – Re–numbered from 8–50013		02/01

Mayor _____
C.E.O. _____
Date _____

Director Works and Services
Drawn T.T. Rec.
Checked L.Mc. Approved
Disc.

Pine Rivers Shire Council
220 Gympie Road
Strathpine
PO Box 5070
Queensland 4500

PINE RIVERS

MANHOLES AND PUMPING STATIONS
FABRICATED METALWORK
Sheet 1 of 2

File No. 400/26
Min Page 01/0436
Standard Drawing No. 8 50042

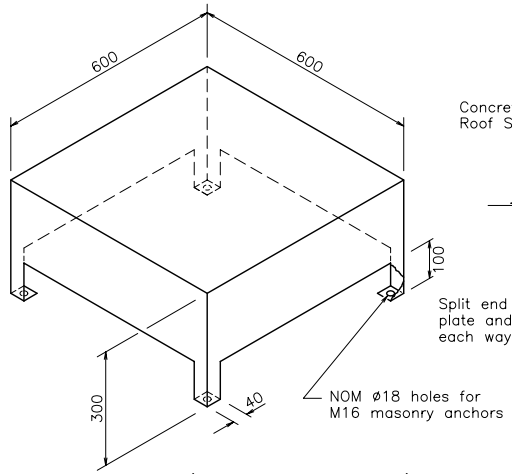

FAN COWLING (Where Required)

FABRICATE FROM 3mm MILD STEEL
HOT DIP GALVANISED

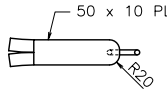

PLAN

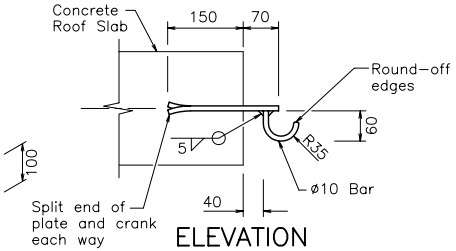

ELEVATION
CHAIN HOOK

FABRICATE FROM STAINLESS STEEL

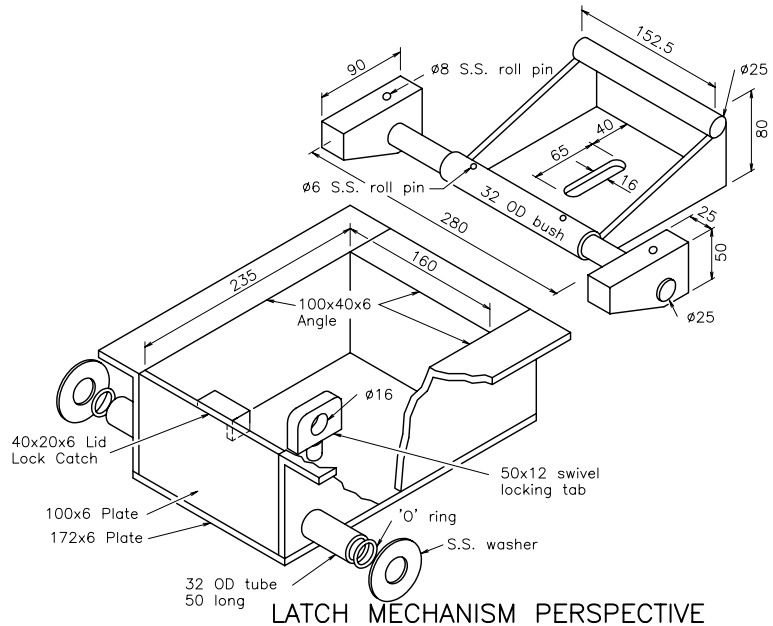

LATCH MECHANISM PERSPECTIVE

ALUMINIUM LATCH BOX AND MECHANISM

(Hallco Engineering, Caloundra, or approved equivalent)

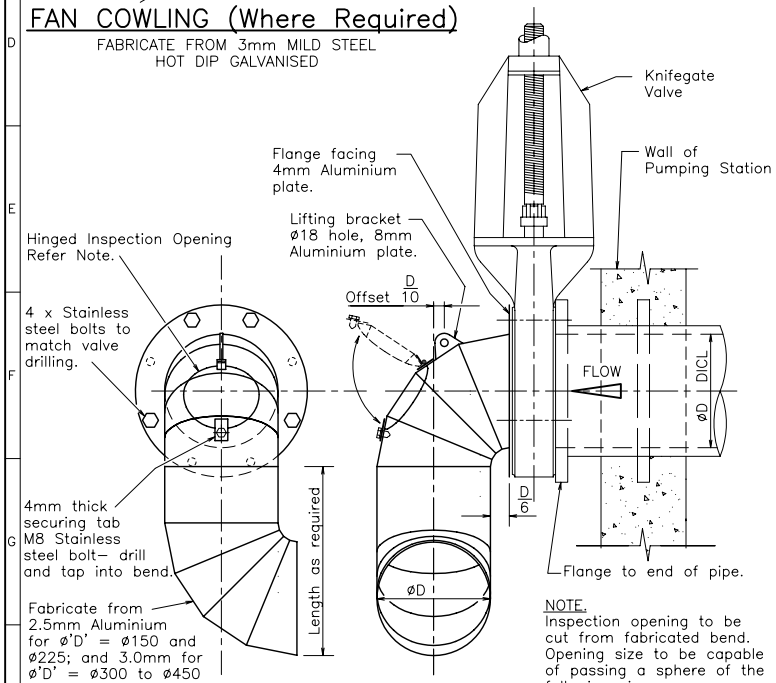

ELEVATION SIDE ELEVATION

NOTE.
Inspection opening to be cut from fabricated bend. Opening size to be capable of passing a sphere of the following sizes:–
ø100 sphere for ø150 drop pipes
ø150 sphere for ⩾ ø225 drop pipes

DROP PIPE

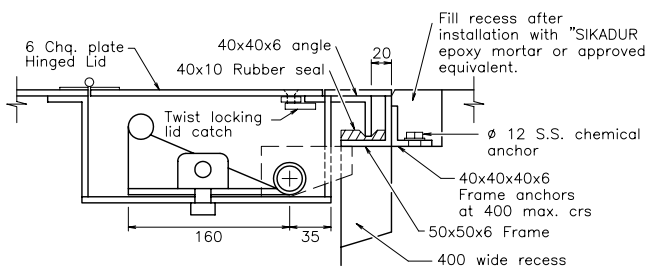

LID AND FRAME SECTION

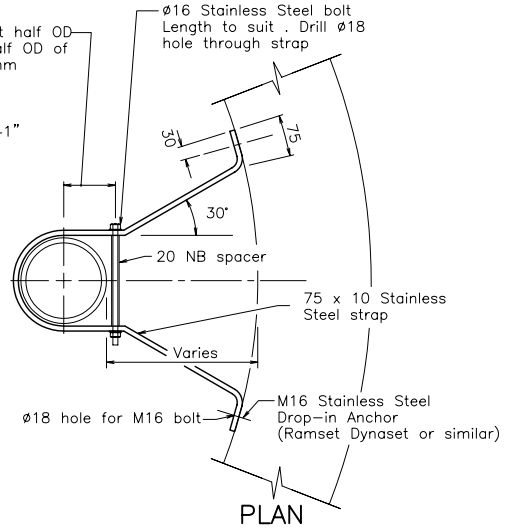

PLAN

PIPE BRACKET

Revisions	Appd	Date
Original Issue – Re-numbered from 8–50014		02/01

Mayor _____
C.E.O. _____
Date _____

Director Works and Services
Drawn T.T. Rec.
Checked L.Mc. Approved
Disc.

Pine Rivers Shire Council
220 Gympie Road
Strathpine
PO Box 5070
Queensland 4500

PINE RIVERS

MANHOLES AND PUMPING STATIONS
FABRICATED METALWORK
Sheet 2 of 2

File No. 400/26
Min Page 01/0436
Standard Drawing No. 8 50043

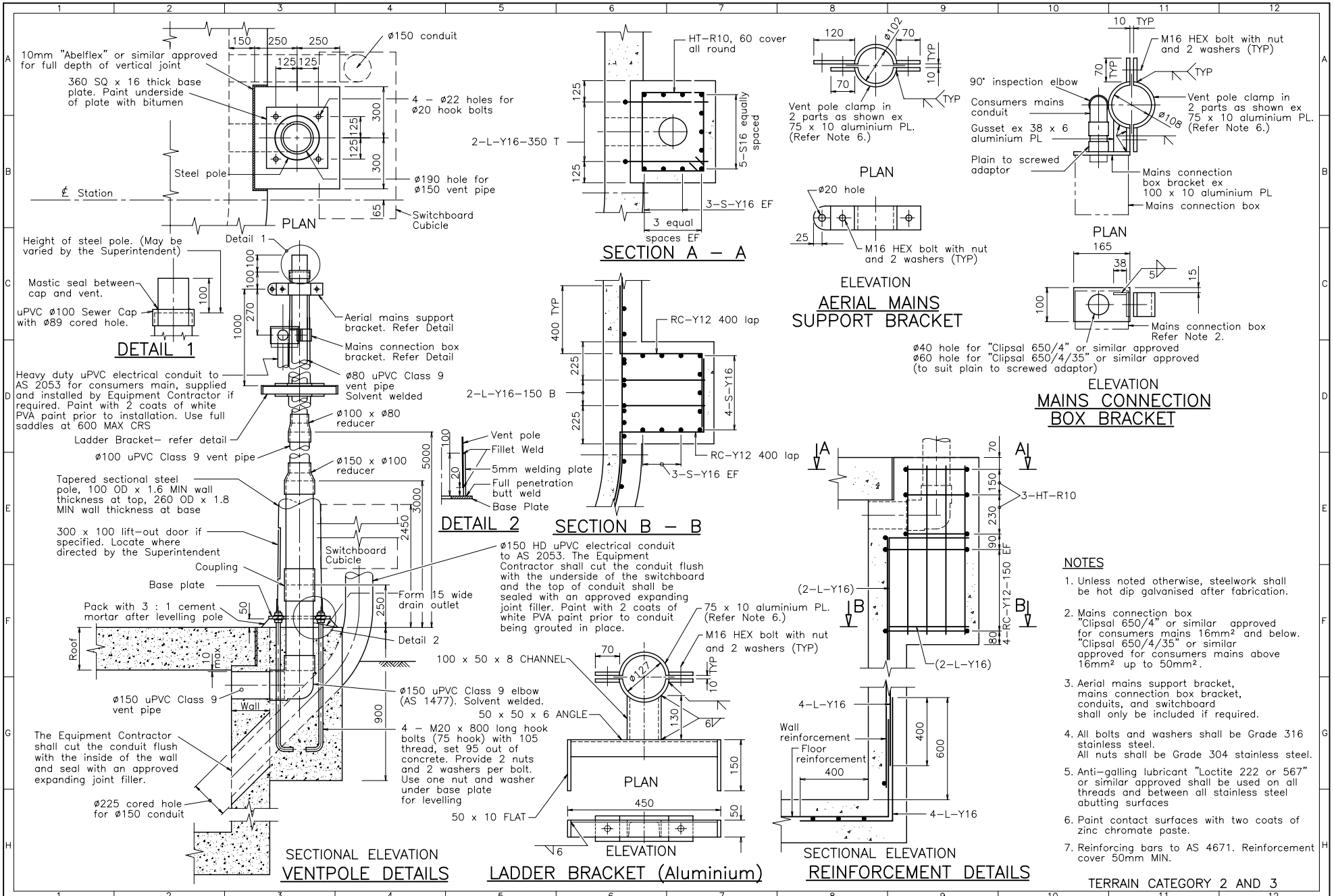

NOTES

1. Unless noted otherwise, steelwork shall be hot dip galvanised after fabrication.
2. Mains connection box "Clipsal 650/4" or similar approved for consumers mains 16mm² and below. "Clipsal 650/4/35" or similar approved for consumers mains above 16mm² up to 50mm².
3. Aerial mains support bracket, mains connection box bracket, conduits, and switchboard shall only be included if required.
4. All bolts and washers shall be Grade 316 stainless steel. All nuts shall be Grade 304 stainless steel.
5. Anti–galling lubricant "Loctite 222 or 567" or similar approved shall be used on all threads and between all stainless steel abutting surfaces
6. Paint contact surfaces with two coats of zinc chromate paste.
7. Reinforcing bars to AS 4671. Reinforcement cover 50mm MIN.

TERRAIN CATEGORY 2 AND 3

Revisions	Appd	Date
A Note 7 amended		2/05
Original Issue		09/96

Mayor _____
C.E.O. _____
Date _____

Director assets & Infrastructure
Drawn | Rec.
Checked | Approved
Disc.

Pine Rivers Shire Council
220 Gympie Road
Strathpine
PO Box 5070
Queensland 4500

PINE RIVERS

7.2m VENT POLE
STATION INSTALLATION

File No. 400/26 | Min Page
Standard Drawing No.
8 | 50050 | A

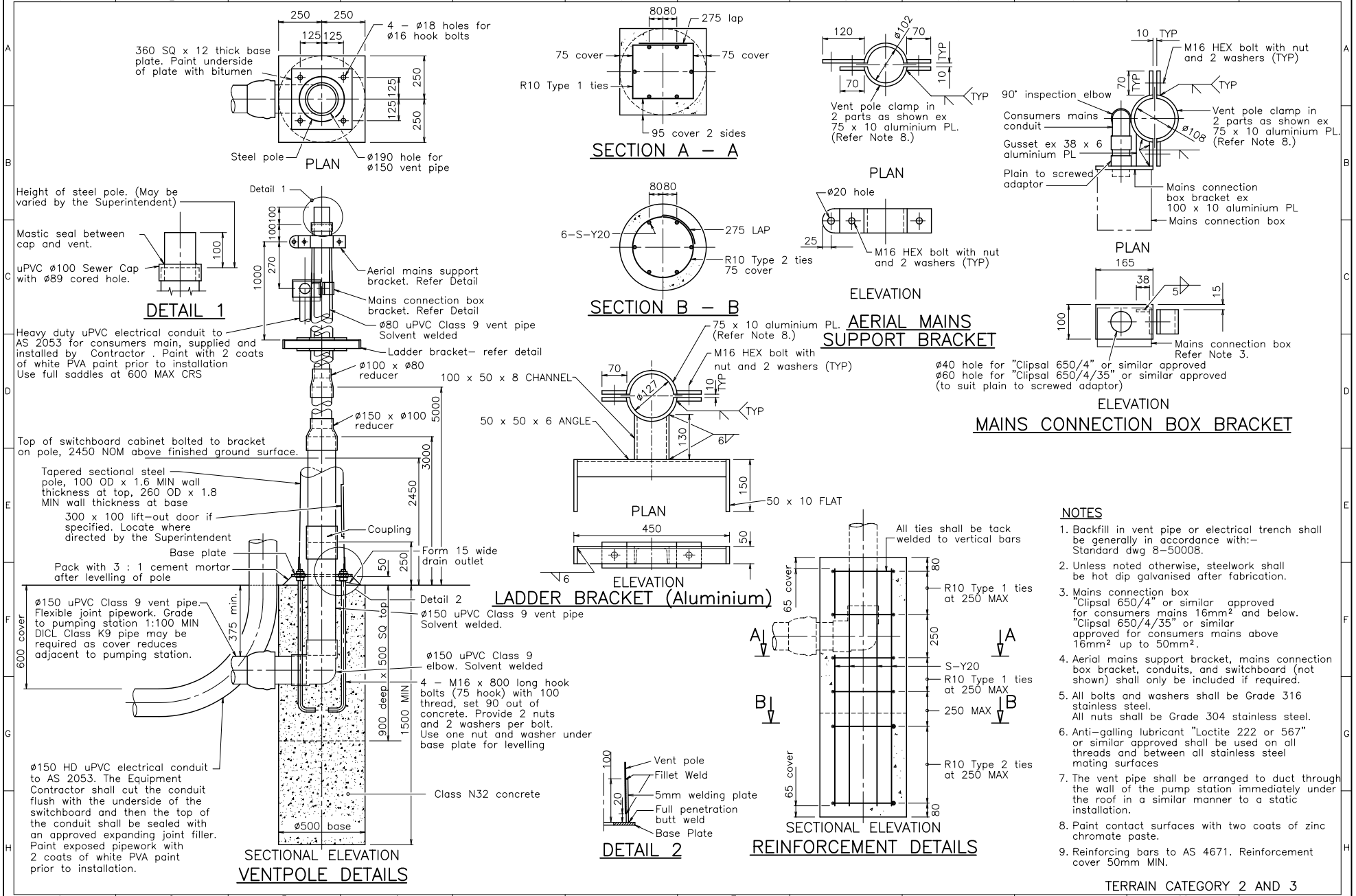

NOTES

1. Backfill in vent pipe or electrical trench shall be generally in accordance with:– Standard dwg 8–50008.
2. Unless noted otherwise, steelwork shall be hot dip galvanised after fabrication.
3. Mains connection box "Clipsal 650/4" or similar approved for consumers mains 16mm² and below. "Clipsal 650/4/35" or similar approved for consumers mains above 16mm² up to 50mm².
4. Aerial mains support bracket, mains connection box bracket, conduits, and switchboard (not shown) shall only be included if required.
5. All bolts and washers shall be Grade 316 stainless steel. All nuts shall be Grade 304 stainless steel.
6. Anti–galling lubricant "Loctite 222 or 567" or similar approved shall be used on all threads and between all stainless steel mating surfaces
7. The vent pipe shall be arranged to duct through the wall of the pump station immediately under the roof in a similar manner to a static installation.
8. Paint contact surfaces with two coats of zinc chromate paste.
9. Reinforcing bars to AS 4671. Reinforcement cover 50mm MIN.

TERRAIN CATEGORY 2 AND 3

Revisions	Appd	Date
A Note 9 amended		2/05
Original Issue		09/96

Mayor _____
C.E.O. _____
Date _____

Director Assets & Infrastructure
Drawn | Rec.
Checked | Approved
Disc.

Pine Rivers Shire Council
220 Gympie Road
Strathpine
PO Box 5070
Queensland 4500

PINE RIVERS

7.2m VENT POLE
REMOTE INSTALLATION

File No. 400/26 | Min Page
Standard Drawing No. 8 | 50051 | A

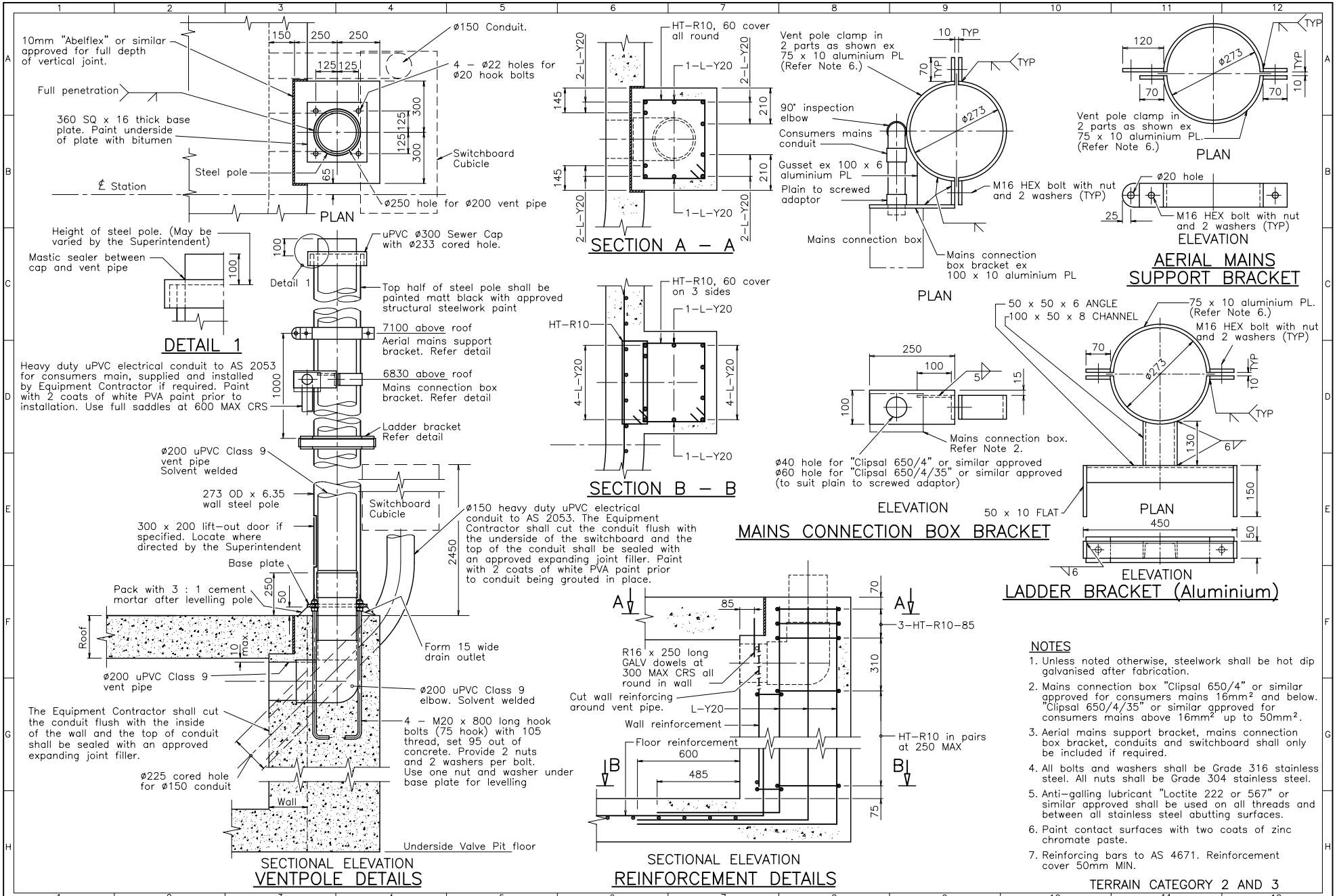

NOTES

1. Unless noted otherwise, steelwork shall be hot dip galvanised after fabrication.
2. Mains connection box "Clipsal 650/4" or similar approved for consumers mains 16mm² and below. "Clipsal 650/4/35" or similar approved for consumers mains above 16mm² up to 50mm².
3. Aerial mains support bracket, mains connection box bracket, conduits and switchboard shall only be included if required.
4. All bolts and washers shall be Grade 316 stainless steel. All nuts shall be Grade 304 stainless steel.
5. Anti-galling lubricant "Loctite 222 or 567" or similar approved shall be used on all threads and between all stainless steel abutting surfaces.
6. Paint contact surfaces with two coats of zinc chromate paste.
7. Reinforcing bars to AS 4671. Reinforcement cover 50mm MIN.

TERRAIN CATEGORY 2 AND 3

Revisions	Appd	Date
A Note 7 amended		2/05
Original Issue		09/96

Mayor _____
C.E.O. _____
Date _____

Director Assets & Infrastructure
Drawn | Rec.
Checked | Approved
Disc.

Pine Rivers Shire Council
220 Gympie Road
Strathpine
PO Box 5070
Queensland 4500

PINE RIVERS

12.0m VENT PIPE
STATION INSTALLATION

File No. 400/26 | Min Page
Standard Drawing No.
8 | 50052 | A

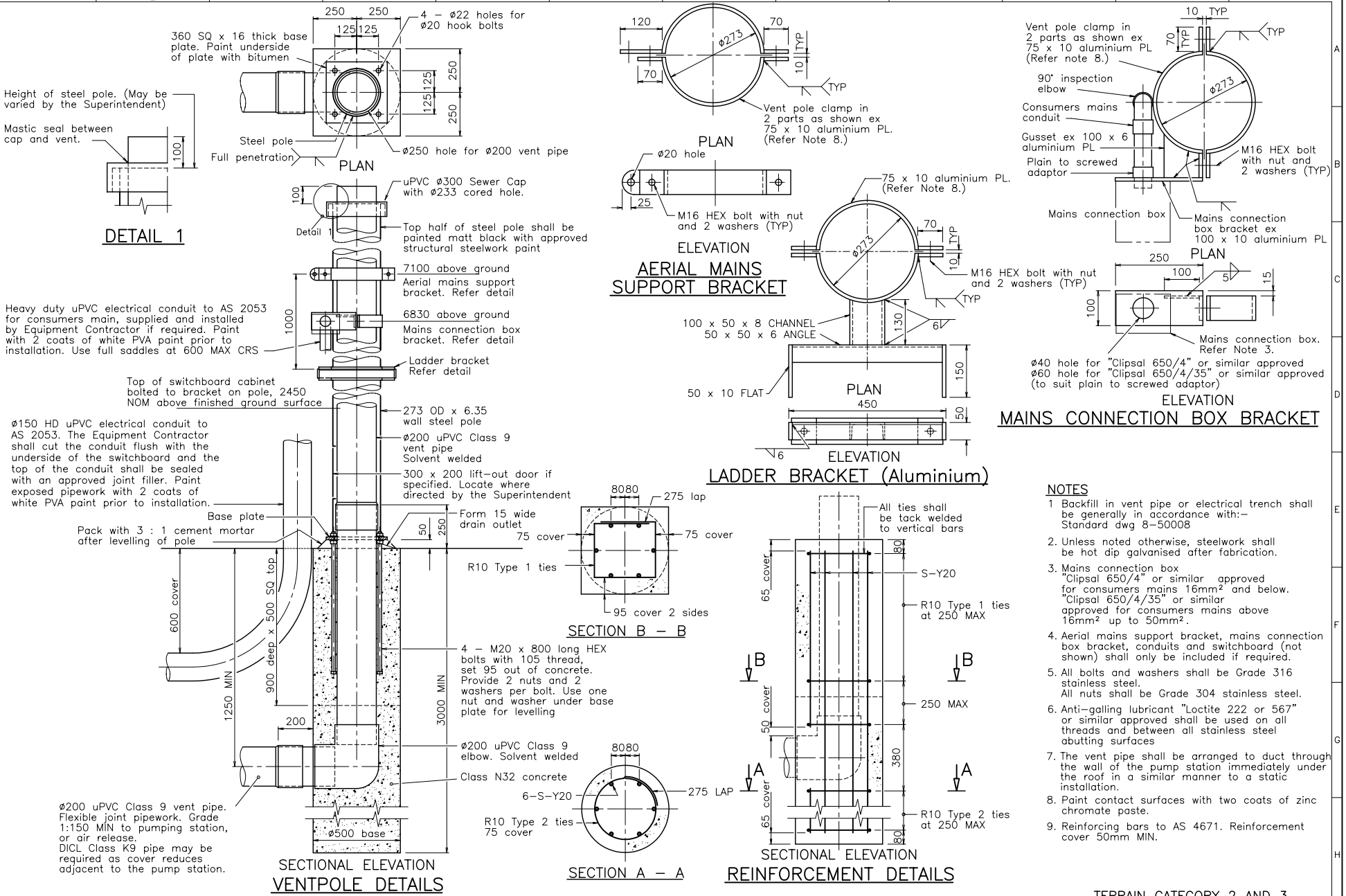

NOTES

1. Backfill in vent pipe or electrical trench shall be generally in accordance with:– Standard dwg 8–50008
2. Unless noted otherwise, steelwork shall be hot dip galvanised after fabrication.
3. Mains connection box "Clipsal 650/4" or similar approved for consumers mains 16mm² and below. "Clipsal 650/4/35" or similar approved for consumers mains above 16mm² up to 50mm².
4. Aerial mains support bracket, mains connection box bracket, conduits and switchboard (not shown) shall only be included if required.
5. All bolts and washers shall be Grade 316 stainless steel. All nuts shall be Grade 304 stainless steel.
6. Anti–galling lubricant "Loctite 222 or 567" or similar approved shall be used on all threads and between all stainless steel abutting surfaces
7. The vent pipe shall be arranged to duct through the wall of the pump station immediately under the roof in a similar manner to a static installation.
8. Paint contact surfaces with two coats of zinc chromate paste.
9. Reinforcing bars to AS 4671. Reinforcement cover 50mm MIN.

TERRAIN CATEGORY 2 AND 3

Revisions	Appd	Date
A Note 9 amended		2/05
Original Issue		09/96

Mayor _____
C.E.O. _____
Date _____

Director Assets & Infrastructure
Drawn | Rec.
Checked | Approved
Disc.

Pine Rivers Shire Council
220 Gympie Road
Strathpine
PO Box 5070
Queensland 4500

PINE RIVERS

12.0m VENT POLE
REMOTE INSTALLATION

File No. 400/26
Min Page
Standard Drawing No. 8 50053 A

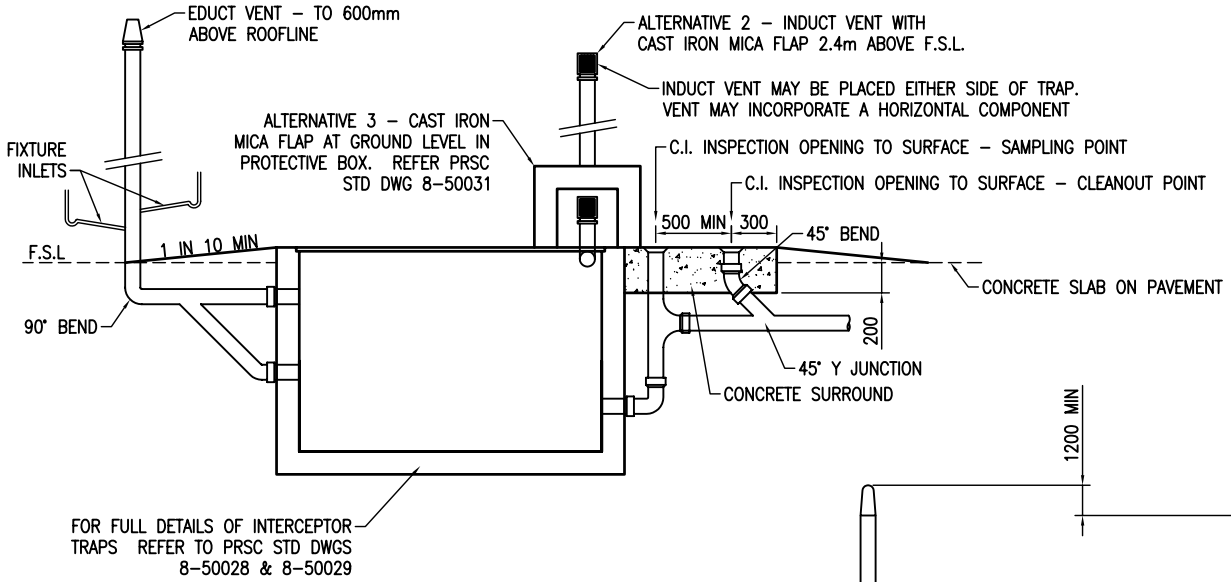

VENT TYPES 2 & 3

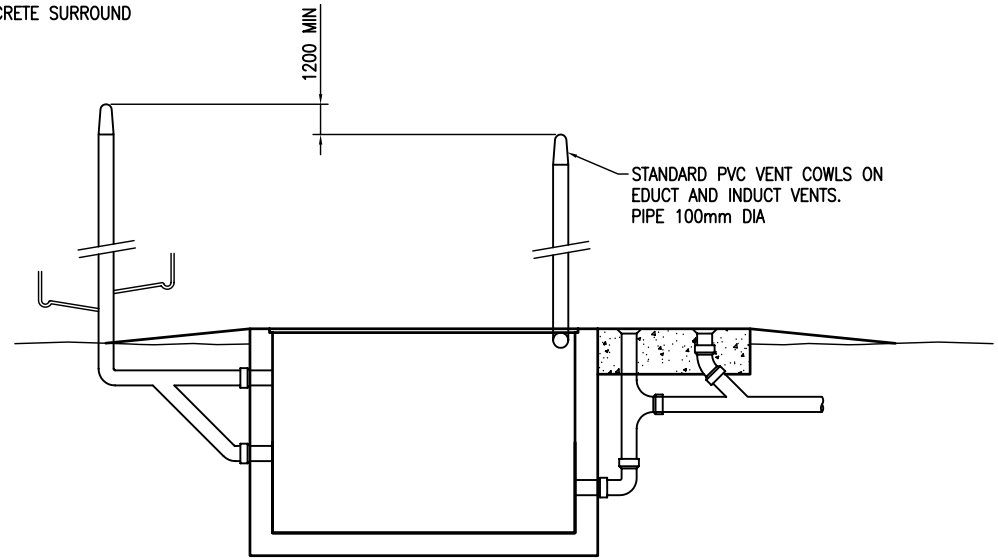

VENT TYPE 1 (PREFERRED)

NOTES:

1. ALL DIMENSIONS ARE IN MILIMETRES UNLESS OTHERWISE SPECIFIED.
2. SOIL STACKS FOR COMMERCIAL BUILDINGS TO BE 100mm DIA MINIMUM.
3. THE DESIGN OF ALL VENTS IT TO COMPLY WITH BYLAW III.
4. INDUCT VENTS: VENT TYPE 1 IS THE PREFERRED INSTALLATION. VENT TYPES 2 AND 3 MAY ONLY BE USED WITH COUNCIL APPROVAL.
5. TOP AIRTIGHT COVERS TO BE 40mm ABOVE CONCRETE SLAB OR PAVEMENT OR 100mm ABOVE F.S.L. COVERS TO BE GRADED 1 IN 10 MINIMUM AWAY FROM OPENING TO C.O. & S.P. AND GREASE TRAP.
6. THIS DRAWING IS TO BE READ IN CONJUNCTION WITH THE STANDARD SEWERAGE BYLAWS.

Revisions	Appd.	Date
Original Issue		12/04

Mayor _____
C.E.O. _____
Date _____

Director Assets & Infrastructure
Drawn PWR Rec.
Checked Approved
Disc.

Pine Rivers Shire Council
220 Gympie Road
Strathpine
PO Box 5070
Queensland 4500

PINE RIVERS

VENTING DETAILS FOR INTERCEPTOR TRAPS AND HOLDING TANKS

File No. 400/26
Min Page
Standard Drawing No.
8 50080

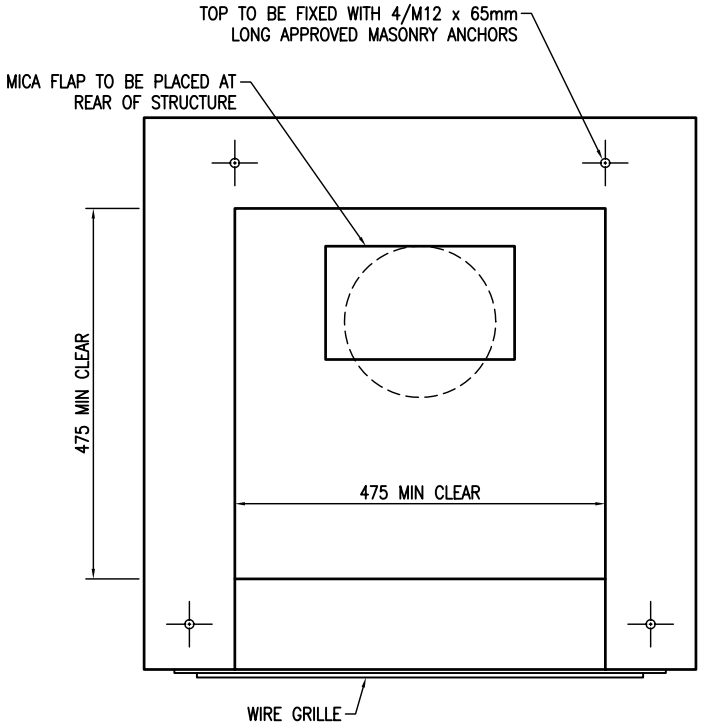

TOP VIEW

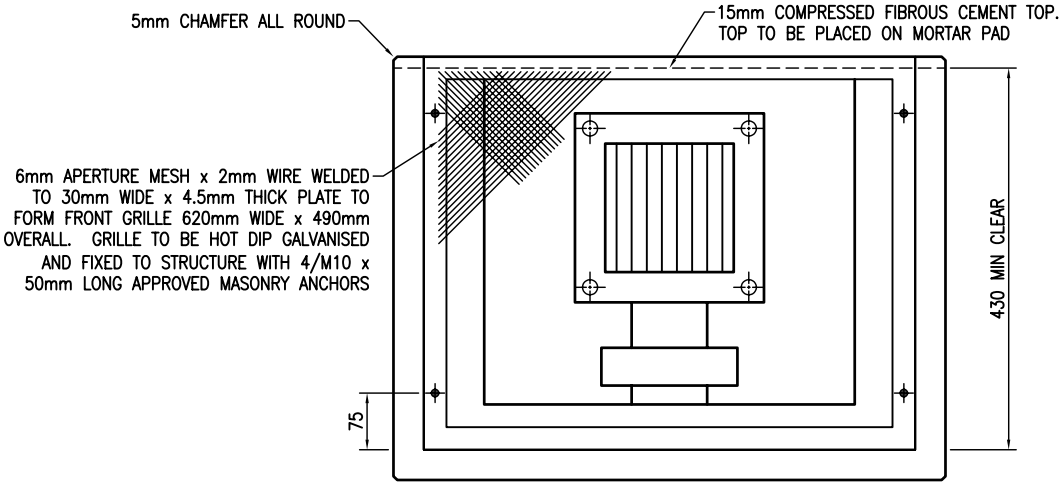

FRONT VIEW

NOTES:

1. ALL DIMENSIONS ARE IN MILIMETRES UNLESS OTHERWISE SPECIFIED.
2. MICA FLAP VENT TO BE USED ONLY WITH COUNCIL APPROVAL.
3. PROTECTIVE BOX MAY BE CONSTRUCTED OF BRICKWORK, CONCRETE FILLED BLOCKWORK, OR FORMED CONCRETE 100mm THICK, AND IS TO SIT ON A 150mm THICK CONCRETE SLAB, LEVEL WITH THE FINISHED SURFACE LEVEL.

Revisions	Appd.	Date
Original Issue		12/04

Mayor _____
C.E.O. _____
Date _____

Director Assets & Infrastructure
Drawn PWR Rec.
Checked Approved
Disc.

Pine Rivers Shire Council
220 Gympie Road
Strathpine
PO Box 5070
Queensland 4500

PINE RIVERS

MICA FLAP VENT AND BOX DETAIL

File No. 400/26
Min Page
Standard Drawing No.
8 50081

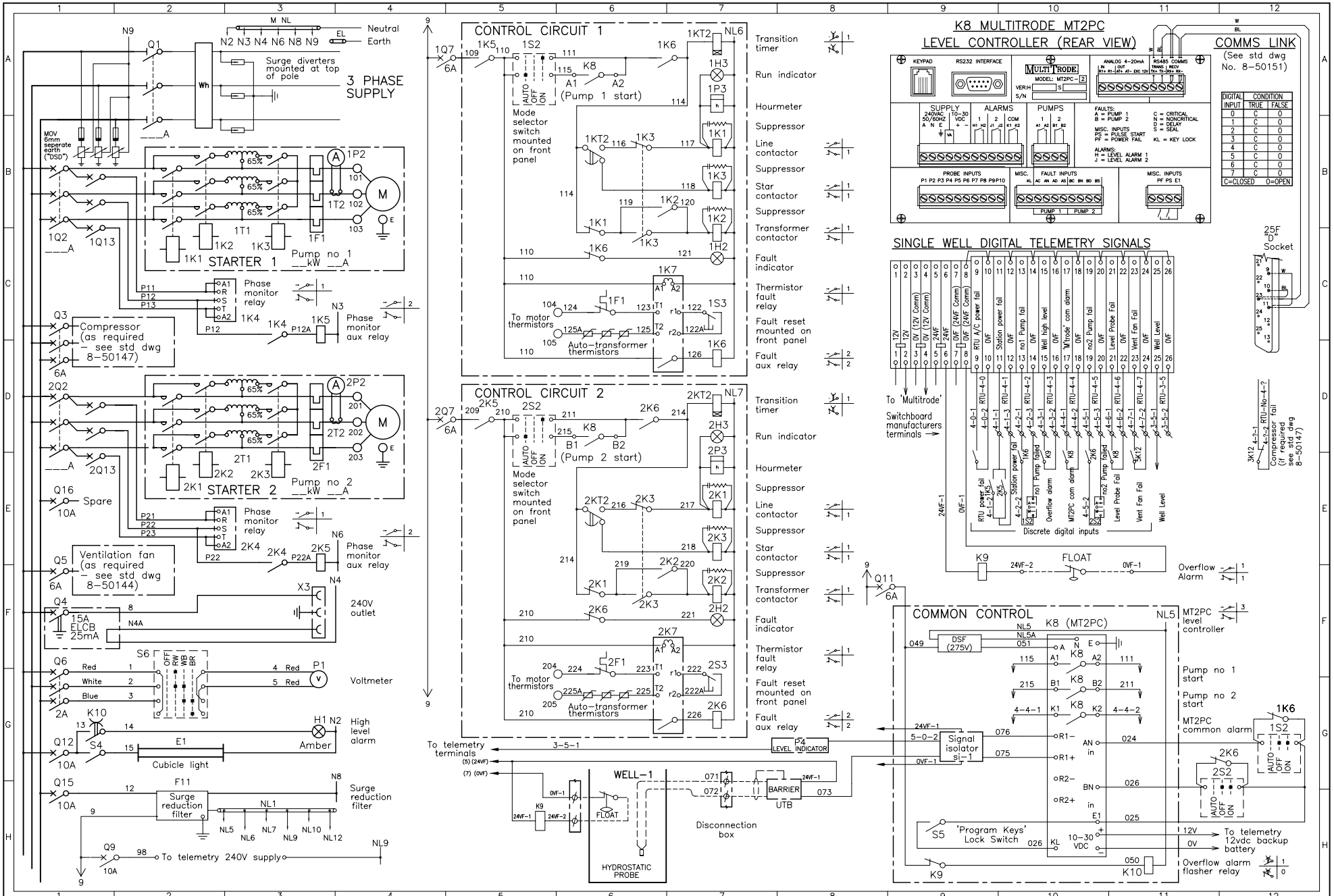

Revisions		Appd	Date
D	General Amendment		2/2005
C	General Amendment		4/2000
B	General Amendment		4/97
A	Issued for Samford Sewerage		9/96
	Original Issue		9/96

Mayor _____
C.E.O. _____
Date _____

Director Assets & Infrastructure _____
Drawn | D.R.C. | Rec.
Checked | Approved
Disc.

Pine Rivers Shire Council
220 Gympie Road
Strathpine
PO Box 5070
Queensland 4500

PINE RIVERS

Note:– Drawings are subject to be revised without notice. It is the contractor's RESPONSIBILITY to base work on latest revisions of THE PINE RIVERS SHIRE COUNCIL standard drawings.
CAD File Path :– I:\ELECMECH\SSTN\STD-DWGS\0-22kW\

SEWERAGE PUMP STATION
STANDARD INSTALLATION UP TO 22kW
SCHEMATIC WIRING DIAGRAM
DWG 1 OF 4 DWG SET

File NO | Min Page
Standard Drawing NO
8 | 50100

ITEM	QTY	MAKE and NUMBER	DESCRIPTION	LABEL SCHEDULE	GRID REF. DWG. 8-50100
DSF	1	'Erico' DSF-6A-275V	EMI/RFI noise Filter		F9
EL	1	'Clipsal' L12A	Earth link	EARTH	A3
E1	1	'Lanson' 20W batten type fluorescent	Cubicle light		G2
F1	2	"Sprecher & Schuh' as reqd - up to CEP7 14-45 plus CEP7-37-PA O/L DIN rail adapters	Thermal O/L Starter 1 Thermal O/L Starter 2	1F1 2F1	C3 E3
F11	1	'Erico' DSF-10A-275V	Surge reduction filter	F11	H2
FLOAT	1	'Flyght' ENM-10	Float switch	-	E10
H1	1	HPM 610 amber with 100W 240V BC lamp with stainless steel mesh lamp guard	Alarm light	-	G3
H2	2	'Sprecher & Schuh' D5P-P53RL7 plus BA9S-13-130V-2.4W indicator lamps	Fault indicator Pump 1 Fault indicator Pump 2	FAULT FAULT	C7 F7
H3	2	'Sprecher & Schuh' D5P-P33RL7 plus BA9S-13-130V-2.4W indicator lamps	Run indicator Pump 1 Run indicator Pump 2	RUN RUN	A7 E7
K1	2	'Sprecher & Schuh' CA7 Contactor Contractor to determine size	Line contactor Pump 1 Line contactor Pump 2	1K1 2K1	C2,B7 E2,E7
K2	2	'Sprecher & Schuh' CA7 Contactor Contractor to determine size	Transformer contactor Pump 1 Transformer contactor Pump 2	1K2 2K2	C2,C7 E2,F7
K3	2	'Sprecher & Schuh' CA7 Contactor Contractor to determine size plus CA7-PA11 contact block	Star contactor Pump 1 Star contactor Pump 2	1K3 2K3	C3,B7 E3,F7
K4	2	'Syrelec' DWR2-440V/'Electromatic' SM170	Phase monitor relay Pump 1 Phase monitor relay Pump 2	1K4 2K4	C3 E3
K5	2	'Finder' 55.34.0050 240VAC (led indication) with 94.74 bases	Phase monitor aux relay Pump 1 Phase monitor aux relay Pump 2	1K5 2K5	C3 E3
K6	2	'Finder' 55.34.0050 240VAC (led indication) with 94.74 bases	Fault aux relay Pump 1 Fault aux relay Pump 2	1K6 2K6	D7 G7
K7	2	'Sprecher & Schuh' RT3-M-240V	Thermistor relay Pump 1 Thermistor relay Pump 2	1K7 2K7	C6 F6
K8	1	'Multitrode' MT2PC	Level controller	K8	G10/A10
K9	1	'Finder' 55.32.0070 24VDC (led indication) with 94.72 base	Overflow alarm relay	K9	H9
K10	1	'Crouzet' MLR1 -240V	Overflow alarm flasher relay	K10	H11
KT2	2	'Crouzet' OA2R1-240V 0.1 sec to 10 sec with SR2P-05 base	Transition timer Pump 1 Transition timer Pump 2	1KT2 2KT2	A7 D7
MOV	3	'Erico' DSD180-4S	Surge diverters		A1-B1
MNL	1	'Clipsal' L12A	Neutral link	NEUTRAL	A3
NL1	1	'Clipsal' L12A	Surge filter Neutral link	SURGE FILTER NEUTRAL LINK	H3
P1	1	'NHP' RQ96E-0-500V	Voltmeter		G3
P2	2	'NHP' RQ96E-0-??/??? (as reqd)	Ammeter Pump 1 Ammeter Pump 2	PUMP 1 PUMP 2	C4 E4
P3	2	'NHP' RQ48.0-240V	Hourmeter Pump 1 Hourmeter Pump 2	PUMP 1 PUMP 2	B7 E7
P4	1	Mann AU40043 Type LPD350 Loop Powered Display	LEVEL INDICATOR	WELL LEVEL	G8
UTB	1	Critec 'UTB-30' Transient Barrier	BARRIER	UTB	G8

Notes

If ventilation fan is required refer dwg 8-50144 for ventilation fan items.
If compressor is required refer dwg 8-50147 for compressor items.
Equipment ratings to be designed by contractor.
All circuit breakers to be 'Terasaki' Din-T (NOT Safe-T) - ie NO LIVE EXPOSED PARTS (terminals or exposed conductors etc.) within switch board WILL BE ALLOWED.
Circuit breaker kA ratings will be determined according to site conditions.
All miniature relays to have led indication.

ITEM	QTY	MAKE and NUMBER	DESCRIPTION	LABEL SCHEDULE	GRID REF. DWG. 8-50100
Q1	1	'Terasaki' Circuit Breaker (CONTRACTOR TO DETERMINE SIZE)	Main Circuit Breaker	Main Circuit Breaker	A2
Q2	2	'Terasaki' DIN-T 6-3?? 3 pole ??A as reqd	Circuit breaker Pump 1 Circuit breaker Pump 2	1Q2 2Q2	B1 D1
Q4	1	'Terasaki' DSMCB6PT1630 16A/30mA	GPO ELCB	Q4	F1
Q6	1	'Terasaki' DIN-T 6-302 3 pole 2A	Voltmeter CB	Q6	F1
Q7	2	'Terasaki' DIN-T 6-106 1 pole 6A	Control CB Pump 1 Control CB Pump 2	1Q7 2Q7	B5 E5
Q9	1	'Terasaki' DSMCB6PT630 6A/30mA	Telemetry CB	Q9	A5
Q11	1	'Terasaki' DIN-T 6-106 1 pole 6A	Common control CB	Q11	F8
Q12	1	'Terasaki' DIN-T 6-110 1 pole 10A	High level alarm and cubicle CB	Q12	G1
Q13	6	'Terasaki' DIN-T 6 102 1 pole 2A	Phase monitor relay CBs Pump 1 Phase monitor relay CBs Pump 2	1Q13 2Q13	C1 E1
Q15	1	'Terasaki' DIN-T 6-110 1 pole 10A	Surge reduction filter and 240/24V transformer CB	Q15	H1
Q16	1	'Terasaki' DIN-T 6-110 1 pole 10A	Spare CB	SPARE	H1
S6	1	'Kraus & Naimer' CA10 A004	Voltmeter selector switch		F2
S2	2	'Kraus & Naimer' CAD12 AU06P7 (Auto-Off-On)	Mode selector switch Pump 1 Mode selector switch Pump 2	1S2 2S2	A5,G12 D5,G12
S3	2	'Sprecher & Schuh' D5P-F607W3LX10	Fault reset pushbutton Pump 1 Fault reset pushbutton Pump 2	FAULT RESET FAULT RESET	D7 G7
S4	1	'Elektra' B1N A2-20P label 'Off-On'	Cubicle light switch	CUBICLE LIGHT	G1
S5	1	'Clipsal' Cat. No. 30M, 70/1 Mounting block	'Program Keys' Lock Switch	PROG KEYS LOCK SW	H9
T1	2	'NHP' 3 coil 30020 fitted with thermistors	Auto-transformer Pump 1 Auto-transformer Pump 2	1T1 2T1	B3 D3
T2	2	'IME' TAS 20B ??/? as reqd	Current transformer Pump 1 Current transformer Pump 2	1T2 2T2	B4 D4
SUPP'	6	'Sprecher & Schuh' CRC 7-280	Contactor supressors Pump 1 Contactor supressors Pump 2	- -	B7,C7 E7,F7
X3	1	'HPM' 787	240V outlet	240V OUTLET	F3
-	1	'Clipsal' WSC 227/1 Weatherproof GPO	'Probac' pump 240V outlet	-	-
-	16	'Sprecher & Schuh' VR2-4	Terminal strip ('Multitrode')	-	-
-	1	'Sprecher & Schuh' VR4-EP		-	-
-	6	'Sprecher & Schuh' VR1-25	Terminal strip (motor cables)	-	-
-	?	'Sprecher & Schuh' VR1-25-EP	End piece	-	-
-	2	'Selectrix' 1107SCC05 (Chrome-padlock type (13mm hasp)) with 1107-u6 (3 point cam) and 1000-u49 (adapter) plus round rods with rollers	Vandal-proof lock	-	-
-	2	'Emka' 1087-U1 (Mild steel zinc plated) 1 x 120° for door 1 1 x 90° for hinged panel	Wind-stop stay	-	-
-	1	Vegawell Type 71 Hydrostatic Pressure Transducer 0 to 10M Range (HART)	Hydrostatic Pressure Transducer	-	H6
SI-1	1	Mann AU92862 Signal Isolator Type UTX/SCI 24V dc powered	Signal isolator	SI-1	G9

	Revisions	Appd	Date
D	General Amendment		2/2005
C	General Amendments		4/2000
B	General Amendments		4/97
A	Issued for Samford Sewerage		9/96
	Original Issue		9/96

Mayor _____ _____
C.E.O. _____ _____
Date _____

Director Assets & Infrastructure _____
Drawn | D.R.C. | Rec.
Checked | Approved
Disc.

Pine Rivers Shire Council
220 Gympie Road
Strathpine
PO Box 5070
Queensland 4500

PINE RIVERS

Note:- Drawings are subject to be revised without notice. It is the contractor's RESPONSIBILITY to base work on latest revisions of THE PINE RIVERS SHIRE COUNCIL standard drawings.
CAD File Path :- I:\ELECMECH\SSTN\STD-DWGS\0-22kW\

SEWERAGE PUMP STATION
STANDARD INSTALLATION UP TO 22kW
EQUIPMENT SCHEDULE
DWG 2 OF 4 DWG SET

File NO | Min Page
Standard Drawing NO
8 | 50101 | D

CONSTRUCTION – Cubicle.

Cubicle to be of 3.15mm Aluminium sheet – folded, fully welded at joints and stiffened where required to form a rigid, weather, drip and vermin proof pole mounting enclosure. Neoprene door seals to be retained by use of metal framing. Three louvres (each louvre comprising of seven slots minimum 65mm wide) to be fitted to each side of the cubicle– one pair to the termination zone, one pair to the auto–transformer section and one pair near the top of cubicle. Louvres to be backed with stainless steel gauze. See 8–50103 sec B–B. One legend card holder to be fitted to inside of door 1. One drawing holder, 300mm wide, 250mm high and 25mm deep to be fitted to inside of door 1. A 3mm thick PVC gland plate to be supplied for 165mm dia. cut–out in base of cubicle. One stainless steel fuse receptacle to be fitted to cubicle. Hand lamp bracket to be fitted to inside of door 2. Two angles with holes 20mm dia. for mounting and lifting to be fitted to top and bottom of cubicle. Equipment chassis to be of 3mm thick aluminium. Meter panel to be 6mm thick laminated pheonelic resin. Provide a stainless steel mesh guard for flashing warning lamp on top of cubicle (12g. S.S. x 25mm weave).

PAINTWORK/FINISH – Cubicle.

Prior to Powder Coating grind smooth all welds, descale and degrease. Powder Coat Mist Green to external sides of switch board.

PAINTWORK/FINISH – Equipment Chassis.

Prior to Powder Coating grind smooth all welds, descale and degrease. Powder Coat White to Equipment Chasis & Internal sides of switch board.

HINGES – Doors 1 & 2.

Lowe & Fletcher CP lift off Type KIS (fixed with 316 s.s. fasteners).

HINGES – Hinged Panels.

Stainless steel full strength piano hinge (fixed with 316 s.s. fasteners).

HANDLES – Doors 1 & 2.

Selectrix 1107SCC05 Chrome Vandal–Proof Handles – Padlock type with 1107–U6 3 point cam, 1000–U49 adapter and round rods with rollers.

LOCKS – Doors 1 & 2.

Selectrix Vandal–proof Handles shall be made secure with standard issue P.R.S.C. padlocks.

LOCKS – Hinged Panels.

EMKA 1000–U45 housing with 1000–U142 slotted insert and 1000–25 Tongue and Seal.

WIRING.

All wiring to be in PVC 600V Grade with multistranded copper conductors with a minimum of 10 AMP rating.
Instrumentation wiring to be 0.5mm^2 minimum. Control wiring to be tinned copper conductors minimum of 1.5mm^2 colour coded and numbered at each end and terminated by use of metal ferrules or pin crimp lugs.
Power wiring to be 2.5mm^2 minimum phase colour coded as shown below.

COLOUR CODE.

A, B and C Phase wiring	– red, white & blue
Voltmeter and CT connections	– red, white, blue & black
240V control active (controlled by isolator on the board)	– white
Thermistors and no volt contacts	– orange
240V neutral	– black
ELV AC active	– brown
ELV AC common	– grey
Telemetry (Digital I/O)	– violet (Internal)
Telemetry (Analog I/O)	– black & white Dacron (Field)
Earth	– green–yellow

LABELS – Internal equipments.

All labels to be W–B–W (except R–W–R main switch and warning labels) Traffolyte inscribed as shown in label schedule. See 8–50101. Main switch label's letter size to be 8mm, compartment labels' letter size to be 6mm and remainder labels' letter size to be 3mm. All labels to be secured with M3 metal threads. Inscription for label A shall be :–" Thermistors – Do Not Test Above 2.5V "
(Fit label A adjacent to pump terminals. See 8–50103).

SIGN – External self–adhesive plastic sign.

A standard P.R.S.C. issue, self–adhesive white light reflecting label, see Detail, worded – "Pine Rivers Shire Council – Pine Water" and "Sewerage Pump Station" in black letters (followed by the Pine Water Logo in the colours required by Pine Water), then "SEWERAGE PUMP STATION" "WHEN LIGHT FLASHES" "PLEASE CALL" "3480 6666" in red letters should be fixed to the cubicle. The (500W x 400H) label shall be located to face the most appropriate thoroughfare accessing the Sewage Pump Station and NOT necessarily be on the door as shown in the Detail. For pole mounted cubicles the label shall be to one side of the pole – preferably the side nearest the accessing thoroughfare.

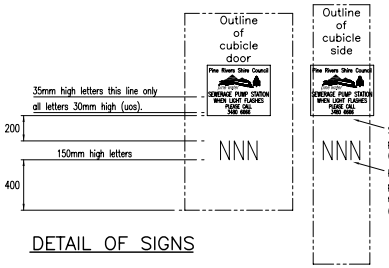

DETAIL OF SIGNS

Sign – External painted sign.

A painted label, in black matt paint, depicting the Sewerage Pump Station number in 150mm high letters (of an approved font and shown in the detail as 'NNN') shall be located beneath the self–adhesive label.

DOOR STAYS – Door 1 & Hinged Panel.

"EMKA" Wind–stop stays shall be provided for DOOR 1 and the hinged panel. Door 1 shall be held open at an angle of 120° and the hinged panel at an angle of no less than 90°. See also standard drawing 8–50103.

COWLES – Sewer Well Ventilation Fan Cowles.

Provide (hot dipped galvanised steel) ventilation fan cowles which would offer suitable protection and adequate air flow. For details see standard drawing No. 8–50014

POLE – Ventilation/Mounting Pole and Mains Supply.

Provide (hot dipped galvanised steel) sewer–ventilation/cubicle–mounting pole and suitable stainlss steel pole mounting straps for pump station cubicle. For pole details refer to P.R.S.C. standard drawing Nos. 8–50050, 8–50051, 8–50052 and 8–50053. See also details at right.

CABLE SUPPORT – Inside well Pump cable supports.

Pump cables inside well shall be supported by means of "NYLON" cable stockings such as:– " L.B. Wire Ropes' " Type 'C' flat lace–up stocking with double eye – or approved equivelent. Each set of cables shall be supported by seperate support stockings. See Detail at right.

NOTES:

1. Unless noted otherwise, steelwork shall be hot dip galvanised after fabrication.
2. All bolts and washers shall be Grade 316 stainless steel. All nuts shall be Grade 304 stainless steel.
3. 32mm conduit for up to 11kW (4.0 mm^2) and 40mm for 11–22kW (16 mm^2) installations.

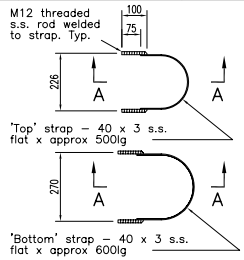

7.2M TAPERED POLE MOUNTING STRAPS
ONE 'TOP' AND ONE 'BOTTOM' STRAP REQUIRED

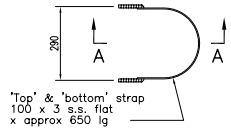

12M STRAIGHT POLE MOUNTING STRAPS
TWO STRAPS REQUIRED

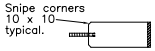

SECTION A–A (TYPICAL)

General note :
Details are indicative only. Straps will have to be of appropriate size to suit the type of vent pole in situ.

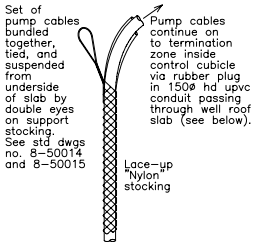

CABLE SUPPORT
(Lace–up stocking one per set of pump cables inside well)

NOTE:–
FOR CUBICLE DETAILS SEE DRAWING 8–50103

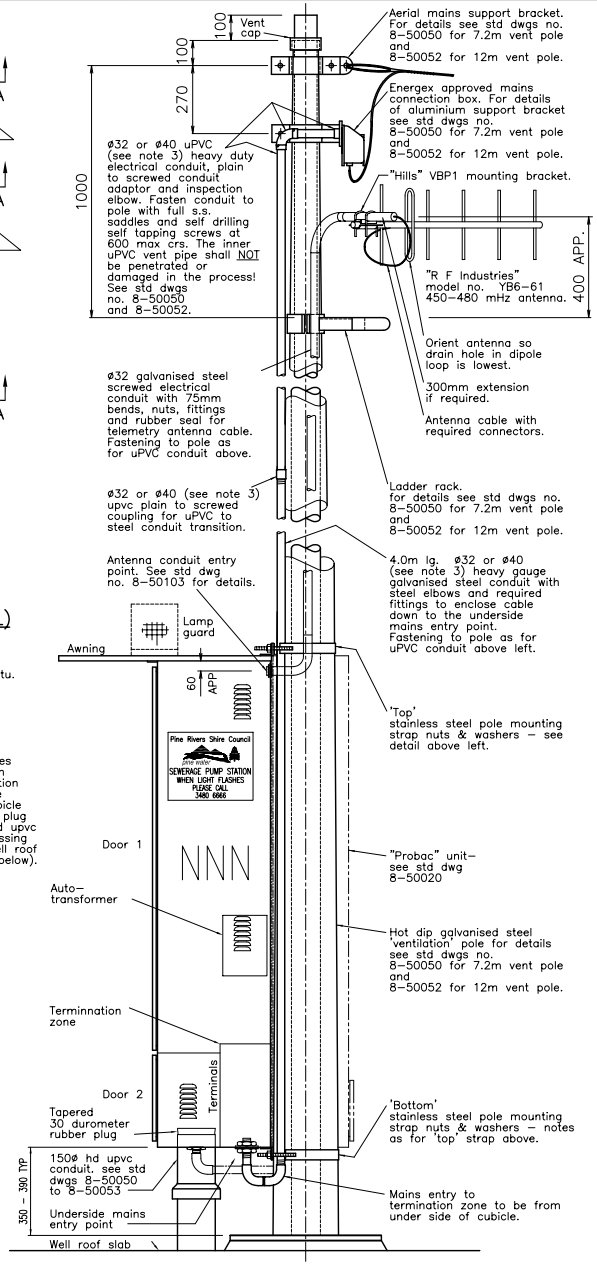

VENT POLE AND SUPPLY MAINS DETAILS

Revisions	Appd	Date
D General Amendments		2/2005
C Generla Amendments		4/2000
B General Amendments		4/97
A Issued for Samford Sewerage		9/96
Original Issue		9/96

Mayor ----------
C.E.O. ----------
Date ----------

Director Assets & Infrastructure ----------
Drawn | D.R.C. | Rec.
Checked | Approved
Disc.

Pine Rivers Shire Council
220 Gympie Road
Strathpine
PO Box 5070
Queensland 4500

PINE RIVERS

Note:– Drawings are subject to be revised without notice. It is the contractor's RESPONSIBILITY to base work on latest revisions of THE PINE RIVERS SHIRE COUNCIL standard drawings.
CAD File Path :– I:\ELECMECH\SSTN\STD–DWGS\0–22kW\

SEWERAGE PUMP STATION
STANDARD INSTALLATION UP TO 22kW
CONSTRUCTION REQUIREMENTS
DWG 3 OF 4 DWG SET

File NO | Min Page
Standard Drawing NO
8 | 50102 | D

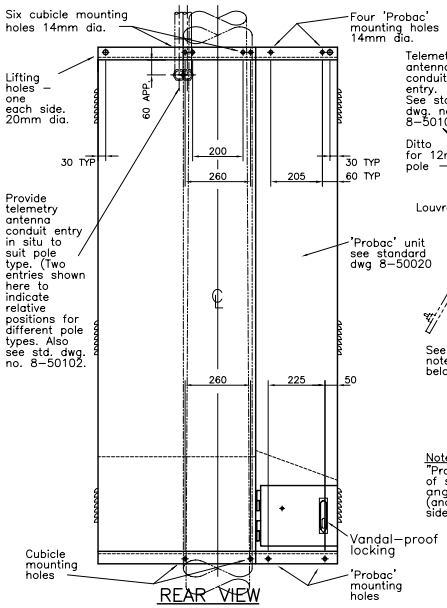

REAR VIEW

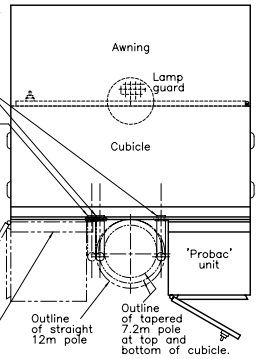

"PROBAC" UNIT MOUNTING OPTIONS

Note: if required
"Probac" unit may be mounted to the left rear of switchboard if the top and bottom mounting angles are welded to the left side of the tank (and penetrations are relocated to the left side to suit) during fabrication of the unit.

NOTES:

1. All fixings to be 316 Grade stainless steel for washers and bolts, and Grade 304 stainless steel for nuts.
2. Refer P.R.S.C. Design Standards and Specifications for heights and general accessibility to equipment.
3. Each of the doors 1 and 2 and the hinged panel to be earthed to the cubicle with its' own flexible braided earth strap.

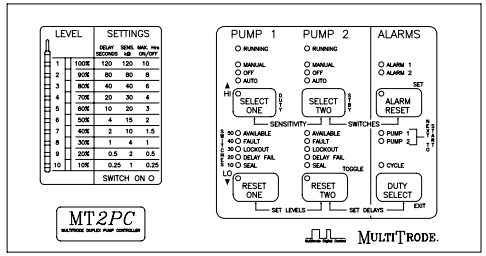

K8 MULTITRODE MT2PC DISPLAY PANEL

DISPLAY PANEL MOUNTED ON CUBICLE HINGED PANEL
CONTROLLER PROPER MOUNTED ON GEAR TRAY

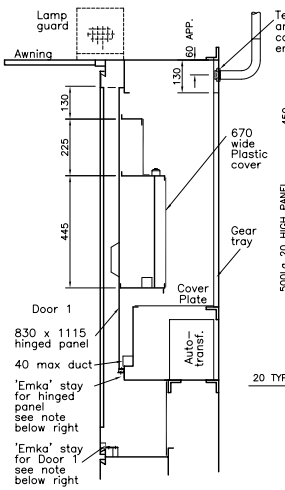

PART SECTION A–A
HINGED PANEL DETAILS

SHOWN WITHOUT EQUIPMENT

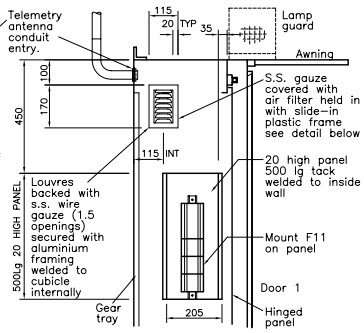

SECTION B–B

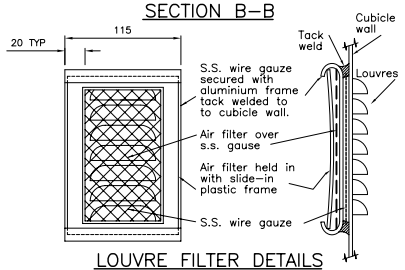

LOUVRE FILTER DETAILS

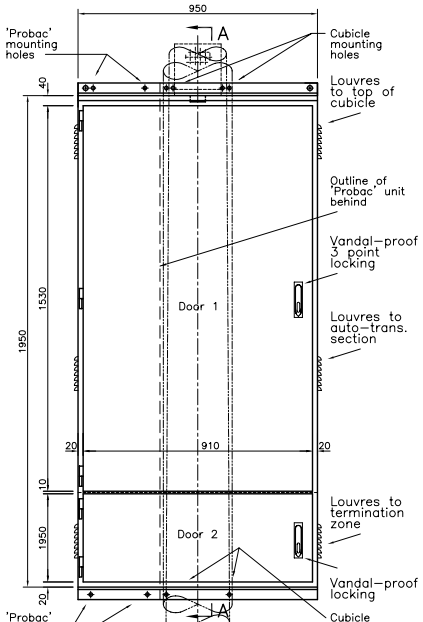

FRONT VIEW

CUBICLE EX 3.15 Tk UNPAINTED
MARINE GRADE ALUMINIUM.

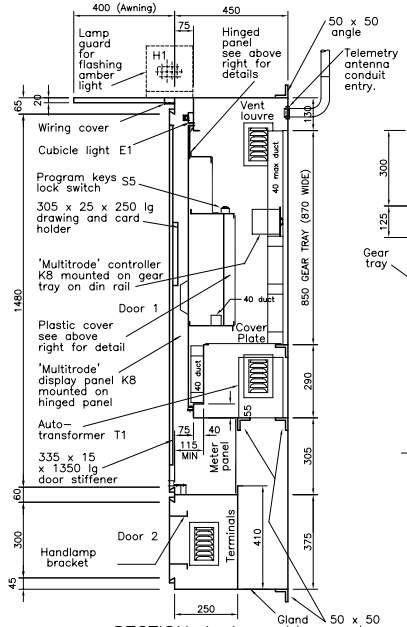

SECTION A–A

SHOWN WITH CONDUIT BUT WITHOUT MOST EQUIPMENT.
INTERNAL PANELS EX 3.0 Tk MARINE GRADE ALUMINIUM.

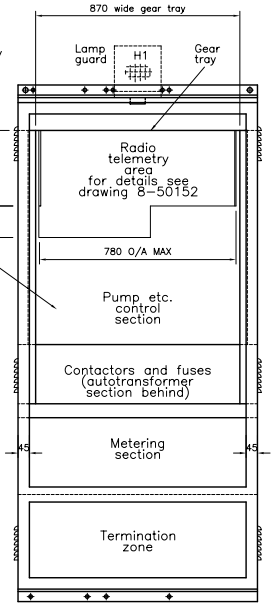

FRONT VIEW

SHOWN WITHOUT DOORS,
HINGED PANEL OR EQUIPMENT

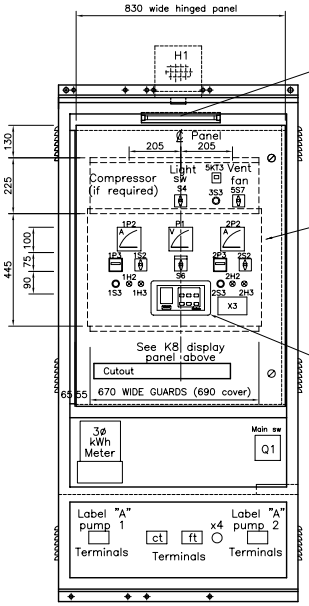

VIEW OF HINGED PANEL

(Shown without piano hinge)

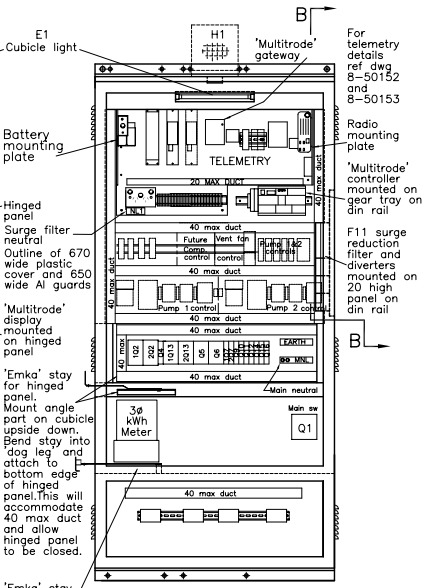

FRONT VIEW

SHOWN WITHOUT DOORS,
HINGES OR HINGED PANEL

Revisions		Appd	Date
C	General Amendments		2/2005
B	General Amendments		4/2000
A	Issued for Samford Sewerage		9/96
	Original Issue		9/96

Mayor ----------
C.E.O. ----------
Date ----------

Director Assets & Development ----------
Drawn | D.R.C. | Rec.
Checked | Approved
Plot Time

Pine Rivers Shire Council
220 Gympie Road
Strathpine
PO Box 5070
Queensland 4500
PINE RIVERS

Note:– Drawings are subject to be revised without notice. It is the contractors RESPONSIBILITY to base work on latest revisions of THE PINE RIVERS SHIRE COUNCIL standard drawings.
CAD File Path :–
I:\ELECMECH\SSTN\STD–DWGS\0–22kW\

SEWERAGE PUMP STATION
STANDARD INSTALLATION UP TO 22kW
CUBICLE CONSTRUCTION DETAILS
DWG 4 OF 4 DWG SET

File NO | Min Page
Standard Drawing NO
8 | 50103 | C B A

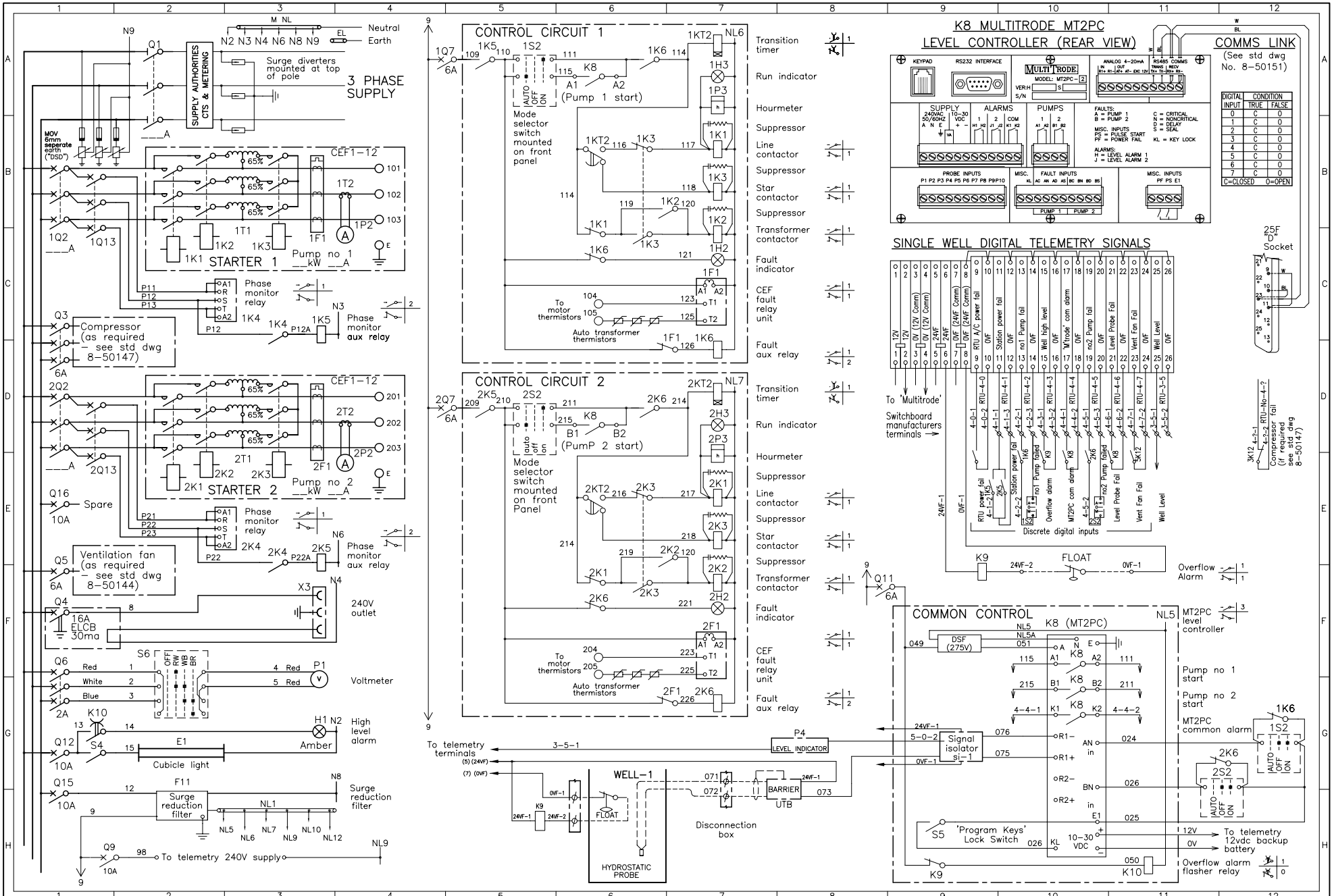

Revisions	Appd	Date
A General Amendments		2/2005
Original Issue		4/2000

Mayor _____
C.E.O. _____
Date _____

Director Assets & Infrastructure _____
Drawn | D.R.C. | Rec.
Checked | Approved
Disc.

Pine Rivers Shire Council
220 Gympie Road
Strathpine
PO Box 5070
Queensland 4500

PINE RIVERS

NOTE:- DRAWINGS ARE SUBJECT TO BE REVISED WITHOUT NOTICE. IT IS THE CONTRACTOR'S RESPONSIBILITY TO BASE WORK ON LATEST REVISIONS OF THE PINE RIVERS SHIRE COUNCIL STANDARD DRAWINGS.

I:\ELECMECH\SSTN\STD-DWGS\22-50kW\

SEWERAGE PUMP STATION
STANDARD INSTALLATION 22 TO 50kW
SCHEMATIC WIRING DIAGRAM
DWG 1 OF 4 DWG SET

File NO | Min Page
Standard Drawing NO
8 | 50110
A

ITEM	QTY	MAKE and NUMBER	DESCRIPTION	LABEL SCHEDULE	GRID REF. DWG. 8-50110
DSF	1	'Erico' DSF-6A-275V	EMI/RFI noise Filter		F9
EL	1	'Clipsal' L12A	Earth link	EARTH	A3
E1	1	'Lanson' 20W batten type fluorescent	Cubicle light		G2
F1	2	"Sprecher & Schuh' CEF1-12	MPR Unit for Starter 1 MPR Unit for Starter 2	1F1 2F1	C3 E3
F11	1	'Erico' DSF-10A-275V	Surge reduction filter	F11	H2
FLOAT	1	'Flyght' ENM-10	Float switch	–	E10
H1	1	HPM 610 amber with 100W 240V BC lamp with stainless steel mesh lamp guard	Alarm light	–	G3
H2	2	'Sprecher & Schuh' D5P-P53RL7 plus BA9S-13-130V-2.4W indicator lamps	Fault indicator Pump 1 Fault indicator Pump 2	FAULT FAULT	C7 F7
H3	2	'Sprecher & Schuh' D5P-P33RL7 plus BA9S-13-130V-2.4W indicator lamps	Run indicator Pump 1 Run indicator Pump 2	RUN RUN	A7 E7
K1	2	'Sprecher & Schuh' CA7 Contactor Contractor to determine size	Line contactor Pump 1 Line contactor Pump 2	1K1 2K1	C2,B7 E2,E7
K2	2	'Sprecher & Schuh' CA7 Contactor Contractor to determine size	Transformer contactor Pump 1 Transformer contactor Pump 2	1K2 2K2	C2,C7 E2,F7
K3	2	'Sprecher & Schuh' CA7 Contactor Contractor to determine size plus CA7-PA11 contact block	Star contactor Pump 1 Star contactor Pump 2	1K3 2K3	C3,B7 E3,F7
K4	2	'Syrelec' DWR2-440V/'Electromatic' SM170	Phase monitor relay Pump 1 Phase monitor relay Pump 2	1K4 2K4	C3 E3
K5	2	'Finder' 55.34.0050 240VAC (led indication) with 94.74 bases	Phase monitor aux relay Pump 1 Phase monitor aux relay Pump 2	1K5 2K5	C3 E3
K6	2	'Finder' 55.34.0050 240VAC (led indication) with 94.74 bases	Fault aux relay Pump 1 Fault aux relay Pump 2	1K6 2K6	D7 G7
K7	2	'Sprecher & Schuh' RT3-M-240V	Thermistor relay Pump 1 Thermistor relay Pump 2	1K7 2K7	C6 F6
K8	1	'Multitrode' MT2PC	Level controller	K8	G10/A10
K9	1	'Finder' 55.32.0070 24VDC (led indication) with 94.72 base	Overflow alarm relay	K9	E10
K10	1	'Crouzet' MLR1 -240V	Overflow alarm flasher relay	K10	H11
KT2	2	'Crouzet' OA2R1-240V 0.1 sec to 10 sec with SR2P-05 base	Transition timer Pump 1 Transition timer Pump 2	1KT2 2KT2	A7 D7
MOV	3	'Erico' DSD180-4S	Surge diverters		A1-B1
MNL	1	'Clipsal' L12A	Neutral link	NEUTRAL	A3
NL1	1	'Clipsal' L12A	Surge filter Neutral link	SURGE FILTER NEUTRAL LINK	H3
P1	1	'NHP' RQ96E-0-500V	Voltmeter		G3
P2	2	'NHP' RQ96E-0-??/??? (as reqd)	Ammeter Pump 1 Ammeter Pump 2	PUMP 1 PUMP 2	C4 E4
P3	2	'NHP' RQ48.0-240V	Hourmeter Pump 1 Hourmeter Pump 2	PUMP 1 PUMP 2	B7 E7
P4	1	Mann AU40043 Type LPD350 Loop Powered Display	LEVEL INDICATOR	WELL LEVEL	G8
UTB	1	Critec 'UTB-30' Transient Barrier	BARRIER	UTB	G8

Notes

If ventilation fan is required refer dwg 8-50144 for ventilation fan items.
If compressor is required refer dwg 8-50147 for compressor items.
Equipment ratings to be designed by contractor.
All circuit breakers to be 'Terasaki" Din-T (NOT Safe-T) - ie NO LIVE EXPOSED PARTS (terminals or exposed conductors etc.) within switch board WILL BE ALLOWED.
Circuit breaker kA ratings will be determined according to site conditions.
All miniature relays to have led indication.

ITEM	QTY	MAKE and NUMBER	DESCRIPTION	LABEL SCHEDULE	GRID REF. DWG. 8-50110
Q1	1	'Terasaki' Circuit Breaker (CONTRACTOR TO DETERMINE SIZE)	Main Circuit Breaker	Main Circuit Breaker	A2
Q2	2	'Terasaki' DIN-T 6-3?? 3 pole ??A as reqd	Circuit breaker Pump 1 Circuit breaker Pump 2	1Q2 2Q2	B1 D1
Q4	1	'Terasaki' DSMCB6PT1630 16A/30mA	GPO ELCB	Q4	F1
Q6	1	'Terasaki' DIN-T 6-302 3 pole 2A	Voltmeter CB	Q6	F1
Q7	2	'Terasaki' DIN-T 6-106 1 pole 6A	Control CB Pump 1 Control CB Pump 2	1Q7 2Q7	B5 E5
Q9	1	'Terasaki' DSMCB6PT630 6A/30mA	Telemetry CB	Q9	A5
Q11	1	'Terasaki' DIN-T 6-106 1 pole 6A	Common control CB	Q11	F8
Q12	1	'Terasaki' DIN-T 6-110 1 pole 10A	High level alarm and cubicle CB	Q12	G1
Q13	6	'Terasaki' DIN-T 6 102 1 pole 2A	Phase monitor relay CBs Pump 1 Phase monitor relay CBs Pump 2	1Q13 2Q13	C1 E1
Q15	1	'Terasaki' DIN-T 6-110 1 pole 10A	Surge reduction filter and 240/24V transformer CB	Q15	H1
Q16	1	'Terasaki' DIN-T 6-110 1 pole 10A	Spare CB	SPARE	H1
S6	1	'Kraus & Naimer' CA10 A004	Voltmeter selector switch		F2
S2	2	'Kraus & Naimer' CAD12 AU06P7 (Auto-Off-On)	Mode selector switch Pump 1 Mode selector switch Pump 2	1S2 2S2	A5,G12 D5,G12
S3	2	'Sprecher & Schuh' D5P-F607W3LX10	Fault reset pushbutton Pump 1 Fault reset pushbutton Pump 2	FAULT RESET FAULT RESET	D7 G7
S4	1	'Elektra' B1N A2-20P label 'Off-On'	Cubicle light switch	CUBICLE LIGHT	G1
S5	1	'Clipsal' Cat. No. 30M, 70/1 Mounting block	'Program Keys' Lock Switch	PROG KEYS LOCK SW	H9
T1	2	'NHP' 3 coil 30020 fitted with thermistors	Auto-transformer Pump 1 Auto-transformer Pump 2	1T1 2T1	B3 D3
T2	2	'IME' TAS 20B ??/? as reqd	Current transformer Pump 1 Current transformer Pump 2	1T2 2T2	B4 D4
SUPP'	6	'Sprecher & Schuh' CRC 7-280	Contactor supressors Pump 1 Contactor supressors Pump 2	– –	B7,C7 E7,F7
X3	1	'HPM' 787	240V outlet	240V OUTLET	F3
–	1	'Clipsal' WSC 227/1 Weatherproof GPO	'Probac' pump 240V outlet	–	–
–	16	'Sprecher & Schuh' VR2-4	Terminal strip ('Multitrode')	–	–
–	1	'Sprecher & Schuh' VR4-EP		–	–
–	6	'Sprecher & Schuh' VR1-25	Terminal strip (motor cables)	–	–
–	?	'Sprecher & Schuh' VR1-25-EP	End piece	–	–
–	2	'Selectrix' 1107SCC05 (Chrome-padlock type (13mm hasp)) with 1107-u6 (3 point cam) and 1000-u49 (adapter) plus round rods with rollers	Vandal-proof lock	–	–
–	2	'Emka' 1087-U1 (Mild steel zinc plated) 1 x 120° for door 1 1 x 90° for hinged panel	Wind-stop stay	–	–
–	1	Vegawell Type 71 Hydrostatic Pressure Transducer 0 to 10M Range (HART)	Hydrostatic Pressure Transducer	–	H6
SI-1	1	Mann AU92862 Signal Isolator Type UTX/SCI 24V dc powered	Signal isolator	SI-1	G9

Revisions	Appd	Date
07 General Amendments		2/2005
Original Issue		4/2000

Mayor _____
C.E.O. _____
Date _____

Director Assets & Infrastructure _____
Drawn | D.R.C. | Rec.
Checked | Approved
Disc.

Pine Rivers Shire Council
220 Gympie Road
Strathpine
PO Box 5070
Queensland 4500

PINE RIVERS

NOTE:- DRAWINGS ARE SUBJECT TO BE REVISED WITHOUT NOTICE. IT IS THE CONTRACTOR'S RESPONSIBILITY TO BASE WORK ON LATEST REVISIONS OF THE PINE RIVERS SHIRE COUNCIL STANDARD DRAWINGS.

I:\ELECMECH\SSTN\STD-DWGS\22-50kW\

SEWERAGE PUMP STATION
STANDARD INSTALLATION UP 22-50kW
EQUIPMENT SCHEDULE
DWG 2 OF 4 DWG SET

File NO | Min Page
Standard Drawing NO
8 | 50111
A

CONSTRUCTION – Cubicle.

Cubicle to be of 3.15mm Aluminium sheet – folded, fully welded at joints and stiffened where required to form a rigid, weather, drip and vermin proof pole mounting enclosure. Neoprene door seals to be retained by use of metal framing. Three louvres (each louvre comprising of seven slots minimum 65mm wide) to be fitted to each side of the cubicle– one pair to the termination zone, one pair to the auto–transformer section and one pair near the top of cubicle. Louvres to be backed with stainless steel gauze. See 8–50103 sec B–B. One legend card holder to be fitted to inside of door 1. One drawing holder, 300mm wide, 250mm high and 25mm deep to be fitted to inside of door 1. A 3mm thick PVC gland plate to be supplied for 165mm dia. cut–out in base of cubicle. One stainless steel fuse receptacle to be fitted to cubicle. Hand lamp bracket to be fitted to inside of door 2. Two angles with holes 20mm dia. for mounting and lifting to be fitted to top and bottom of cubicle. Equipment chassis to be of 3mm thick aluminium. Meter panel to be 6mm thick laminated pheonelic resin. Provide a stainless steel mesh guard for flashing warning lamp on top of cubicle (12g. S.S. x 25mm weave).

PAINTWORK/FINISH – Cubicle.

Prior to Powder Coating grind smooth all welds, descale and degrease. Powder Coat Mist Green to external sides of switch board.

PAINTWORK/FINISH – Equipment Chassis.

Prior to Powder Coating grind smooth all welds, descale and degrease. Powder Coat White to Equipment Chasis & Internal sides of switch board.

HINGES – Doors 1 & 2.

Lowe & Fletcher CP lift off Type KIS (fixed with 316 s.s. fasteners).

HINGES – Hinged Panels.

Stainless steel full strength piano hinge (fixed with 316 s.s. fasteners).

HANDLES – Doors 1 & 2.

Selectrix 1107SCC05 Chrome Vandal–Proof Handles – Padlock type with 1107–U6 3 point cam, 1000–U49 adapter and round rods with rollers.

LOCKS – Doors 1 & 2.

Selectrix Vandal–proof Handles shall be made secure with standard issue P.R.S.C. padlocks.

LOCKS – Hinged Panels.

EMKA 1000–U45 housing with 1000–U142 slotted insert and 1000–25 Tongue and Seal.

WIRING.

All wiring to be in PVC 600V Grade with multistranded copper conductors with a minimum of 10 AMP rating.
Instrumentation wiring to be 0.5mm^2 minimum. Control wiring to be tinned copper conductors minimum of 1.5mm^2 colour coded and numbered at each end and terminated by use of metal ferrules or pin crimp lugs.
Power wiring to be 2.5mm^2 minimum phase colour coded as shown below.

COLOUR CODE.

A, B and C Phase wiring	– red, white & blue
Voltmeter and CT connections	– red, white, blue & black
240V control active (controlled by isolator on the board)	– white
Thermistors and no volt contacts	– orange
240V neutral	– black
ELV AC active	– brown
ELV AC common	– grey
Telemetry (Digital I/O)	– violet (Internal)
Telemetry (Analog I/O)	– black & white Dacron (Field)
Earth	– green–yellow

LABELS – Internal equipments.

All labels to be W–B–W (except R–W–R main switch and warning labels) Traffolyte inscribed as shown in label schedule. See 8–50101. Main switch label's letter size to be 8mm, compartment labels' letter size to be 6mm and remainder labels' letter size to be 3mm. All labels to be secured with M3 metal threads. Inscription for label A shall be :–" Thermistors – Do Not Test Above 2.5V "
(Fit label A adjacent to pump terminals. See 8–50103).

SIGN – External self–adhesive plastic sign.

A standard P.R.S.C. issue, self–adhesive white light reflecting label, see Detail, worded – "Pine Rivers Shire Council – Pine Water" and "Sewerage Pump Station" in black letters (followed by the Pine Water Logo in the colours required by Pine Water), then "SEWERAGE PUMP STATION" "WHEN LIGHT FLASHES" "PLEASE CALL" "3480 6666" in red letters should be fixed to the cubicle. The (500W x 400H) label shall be located to face the most appropriate thoroughfare accessing the Sewage Pump Station and NOT necessarily be on the door as shown in the Detail. For pole mounted cubicles the label shall be to one side of the pole – preferably the side nearest the accessing thoroughfare.

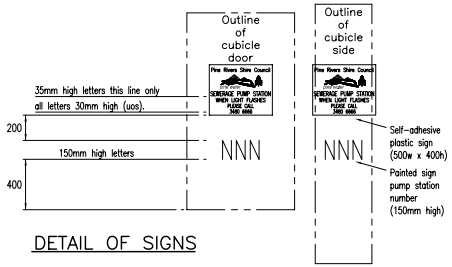

DETAIL OF SIGNS

Sign – External painted sign.

A painted label, in black matt paint, depicting the Sewerage Pump Station number in 150mm high letters (of an approved font and shown in the detail as 'NNN') shall be located beneath the self–adhesive label.

DOOR STAYS – Door 1 & Hinged Panel.

"EMKA" Wind–stop stays shall be provided for DOOR 1 and the hinged panel. Door 1 shall be held open at an angle of 120° and the hinged panel at an angle of no less than 90°. See also standard drawing 8–50103.

COWLES – Sewer Well Ventilation Fan Cowles.

Provide (hot dipped galvanised steel) ventilation fan cowles which would offer suitable protection and adequate air flow. For details see standard drawing No. 8–50014

POLE – Ventilation/Mounting Pole and Mains Supply.

Provide (hot dipped galvanised steel) sewer–ventilation/cubicle–mounting pole and suitable stainlss steel pole mounting straps for pump station cubicle. For pole details refer to P.R.S.C. standard drawing Nos. 8–50050, 8–50051, 8–50052 and 8–50053. See also details at right.

CABLE SUPPORT – Inside well Pump cable supports.

Pump cables inside well shall be supported by means of "NYLON" cable stockings such as:– " L.B. Wire Ropes' " Type 'C' flat lace–up stocking with double eye – or approved equivelent. Each set of cables shall be supported by seperate support stockings. See Detail at right.

NOTES:

1. Unless noted otherwise, steelwork shall be hot dip galvanised after fabrication.
2. All bolts and washers shall be Grade 316 stainless steel. All nuts shall be Grade 304 stainless steel.
3. 32mm conduit for up to 11kW (4.0 mm^2) and 40mm for 11–22kW (16 mm^2) installations.

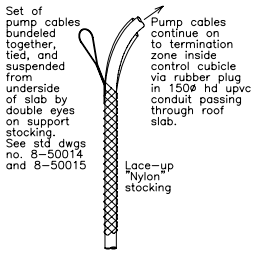

CABLE SUPPORT
(LACE–UP STOCKING ONE PER PUMP CABLE INSIDE WELL)

NOTE:–
FOR CUBICLE DETAILS SEE DRAWING 8–50113

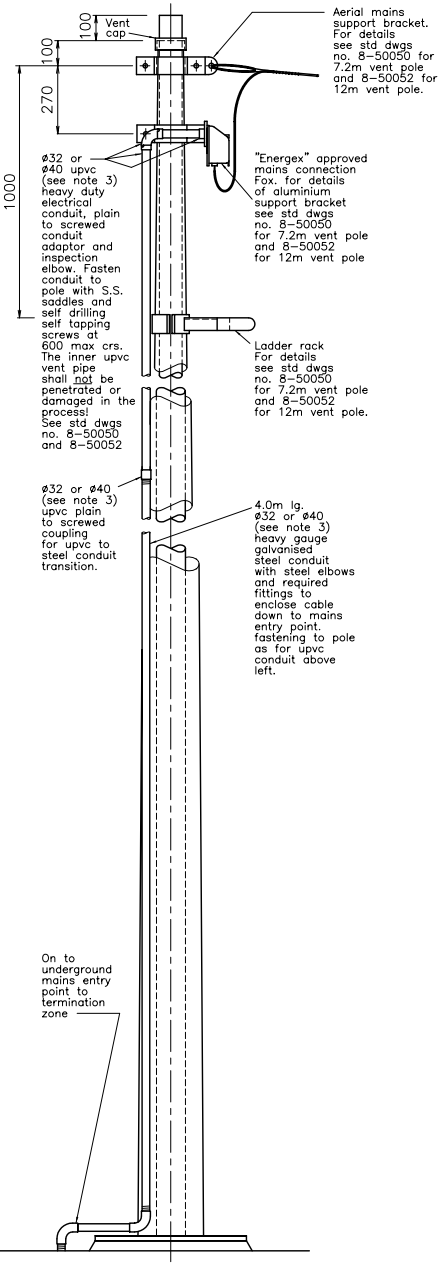

VENT POLE AND SUPPLY MAINS DETAILS

Revisions	Appd	Date
A General Amendments		2/2005
Original Issue		4/2000

Mayor _____
C.E.O. _____
Date _____

Director Assets & Infrastructure _____
Drawn | D.R.C. | Rec.
Checked | Approved
Disc.

Pine Rivers Shire Council
220 Gympie Road
Strathpine
PO Box 5070
Queensland 4500

PINE RIVERS

NOTE:– DRAWINGS ARE SUBJECT TO BE REVISED WITHOUT NOTICE. IT IS THE CONTRACTOR'S RESPONSIBILITY TO BASE WORK ON LATEST REVISIONS OF THE PINE RIVERS SHIRE COUNCIL STANDARD DRAWINGS.

I:\ELECMECH\SSTN\STD–DWGS\22–50kW\

SEWERAGE PUMP STATION
STANDARD INSTALLATION 22–50kW
CUBICLE CONSTRUCTION SCHEDULE
DWG 3 OF 4 DWG SET

File NO | Min Page
Standard Drawing NO
8 | 50112
A

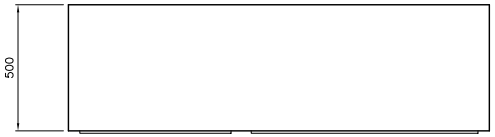

PLAN VIEW

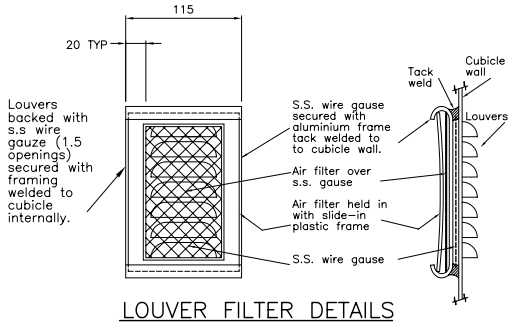

LOUVER FILTER DETAILS

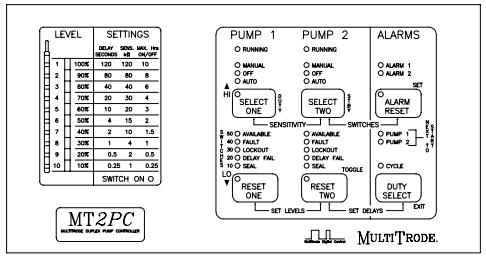

K8 MULTITRODE MT2PC DISPLAY PANEL

DISPLAY PANEL MOUNTED ON CUBICLE HINGED PANEL
CONTROLLER PROPER MOUNTED ON GEAR TRAY

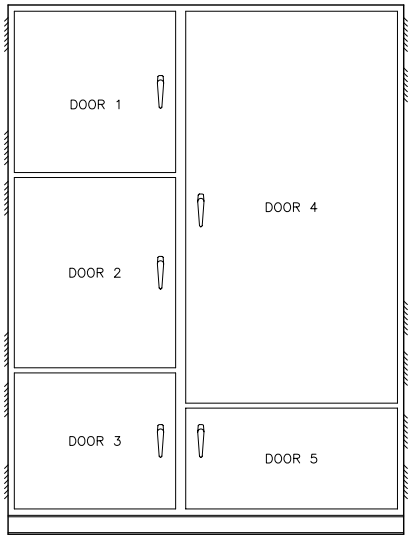

FRONT VIEW

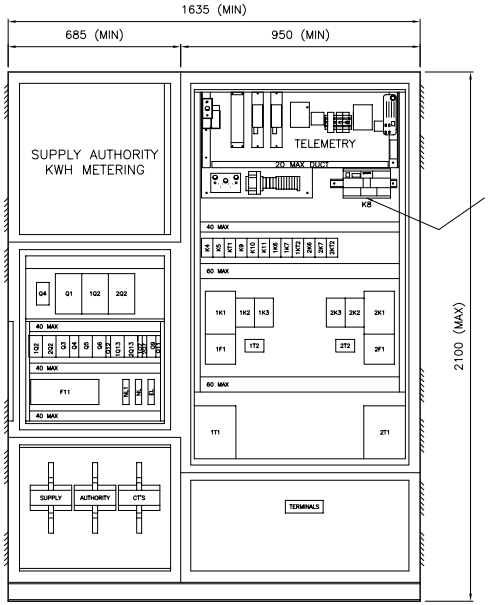

FRONT VIEW

SHOWN WITHOUT DOORS OR HINGED PANELS

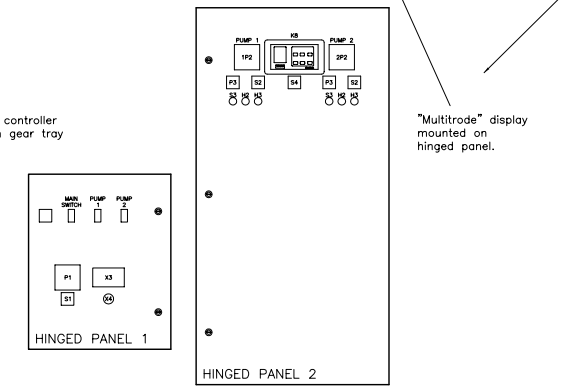

DETAIL OF HINGED PANELS

GENERAL ARRANGEMENT OF SWITCHBOARD CUBICLE

SWITCHBOARD CUBICLE SHOWN AS AN EXAMPLE ONLY – DESIGNES FOR SPECIFIC PUMP STATIONS SHOULD BE SUBMITTED FOR APPROVAL

NOTE

DETAILS TO BE DESIGNED BY CONTRACTOR

Revisions	Appd	Date
A General Amendments		2/2005
Original Issue		4/2000

Mayor _____
C.E.O. _____
Date _____

Director Assets & Infrastructure _____
Drawn | D.R.C. | Rec.
Checked | | Approved
Disc.

Pine Rivers Shire Council
220 Gympie Road
Strathpine
PO Box 5070
Queensland 4500

PINE RIVERS

NOTE:– DRAWINGS ARE SUBJECT TO BE REVISED WITHOUT NOTICE. IT IS THE CONTRACTOR'S RESPONSIBILITY TO BASE WORK ON LATEST REVISIONS OF THE PINE RIVERS SHIRE COUNCIL STANDARD DRAWINGS.

I:\ELECMECH\SSTN\STD-DWGS\22-50kW\

SEWERAGE PUMP STATION
STANDARD INSTALLATION 22–50kW
CUBICLE CONSTRUCTION DETAILS
DWG 4 OF 4 DWG SET

File NO | Min Page
Standard Drawing NO
8 | 50113 | A

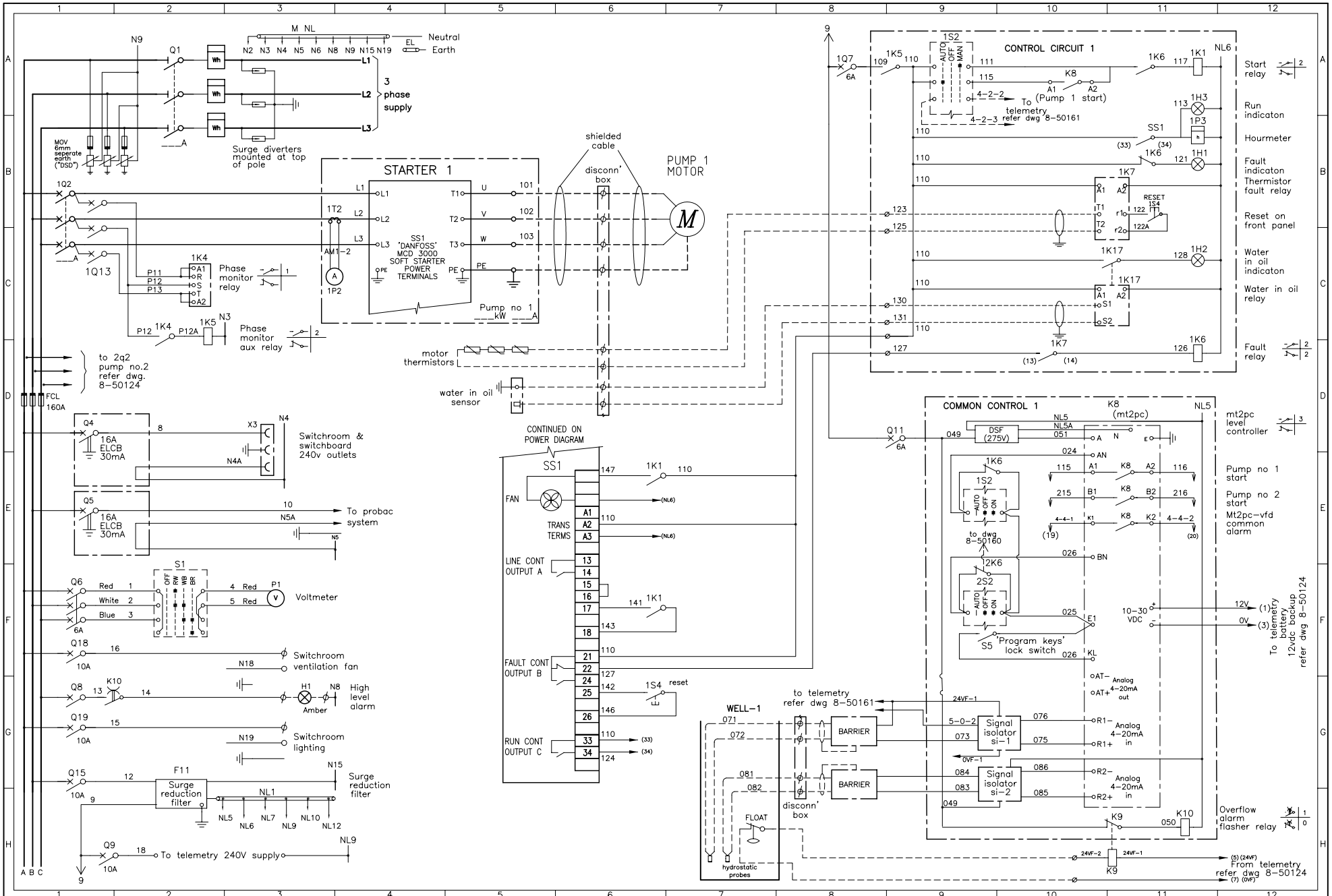

Revisions	Appd	Date
A General Amendments		02/2005
Original Issue		4/2000

Mayor _____
C.E.O. _____
Date _____

Director Assets & Infrastructure _____
Drawn | D.R.C. | Rec.
Checked | Approved
Disc.

Pine Rivers Shire Council
220 Gympie Road
Strathpine
PO Box 5070
Queensland 4500

PINE RIVERS

NOTE:- DRAWINGS ARE SUBJECT TO BE REVISED WITHOUT NOTICE. IT IS THE CONTRACTOR'S RESPONSIBILITY TO BASE WORK ON LATEST REVISIONS OF THE PINE RIVERS SHIRE COUNCIL STANDARD DRAWINGS.

I:\ELECMECH\SSTN\STD-DWGS\50-100kw

SEWERAGE PUMP STATION
STD. INST. 50kW AND UP S.S
PUMP 1 WIRING DIAGRAM
DWG 1 OF 6 DWG SET

File NO | Min Page
Standard Drawing NO
8 | 50120 | A

ITEM	QTY	MAKE and NUMBER	DESCRIPTION	LABEL SCHEDULE
EL	1	'Clipsal' L12A	Earth link	EARTH
E1	1	'Lanson' 20W batten type fluorescent	Cubicle light	
F11	1	'Critec' DSF-10A-275V	Surge reduction filter	F11
FCL	1	NHP XLP 00 c/w N00 160 Fuse Links	Fault current limiters	FCL
FLOAT	1	'Flyght' ENM-10	Float switch	–
H1	1	'HPM' 610 amber with 100W 240V BC lamp with stainless steel mesh lamp guard	Alarm light	
1H1 2H1	2	'Sprecher & Schuh' D5P-P53RL7 c/w Ba9s-l3-130v-2.4W lamp	Fault indicator Pump 1 Fault indicator Pump 2	FAULT FAULT
1H2 2H2	2	'Sprecher & Schuh' D5P-P53RL7 c/w Ba9s-l3-130v-2.4W lamp	Water in oil indicator Pump 1 Water in oil indicator Pump 2	SEAL FAILURE SEAL FAILURE
1K1 2K1	2	'Finder' 55.34.0054 240VAC (led indication) with 94.74 bases	Start relay Pump 1 Start relay Pump 2	1K1 2K1
1K3 2K3	2	'Finder' 55.34.0054 240VAC (led indication) with 94.74 bases	Manual relay Pump 1 Manual relay Pump 2	1K3 2K3
1K4 2K4	2	'Carlo Gavazzi' DPA-01-D-M48 with 94.74 bases	Phase failure relay Pump 1 phase failure relay Pump 2	1K4 2K4
1K5 2K5	2	'Finder' 55.34.0054 240VAC (led indication) with 94.74 bases	Phase failure aux. relay Pump 1 Phase failure aux. relay Pump 2	1K5 2K5
1K6 2K6	2	'Finder' 55.34.0054 240VAC (led indication) with 94.74 bases	Fault relay Pump 1 Fault relay Pump 2	1K6 2K6
1K6A 2K6A	2	'Finder' 55.34.0054 240VAC (led indication) with 94.74 bases	Fault aux relay Pump 1 Fault aux relay Pump 2	1K6A 2K6A
1K17 2K17	2	'ATC' 78562-240VAC with 94.74 bases	Seal failure relay Pump 1 Seal failure relay Pump 2	1K17 2K17
1K7 2K7	2	RT7-E2 24-240VAC/DC	Thermistor relay Pump 1 Thermistor relay Pump 2	1K7 2K7
K8	1	'Multitrode' MT2PCVFD 2	Level controller	K8
K9	1	'Finder' 55.32.0070 24vdc (led indication) with 94.72 base	Overflow alarm relay	K9
K10	1	'Carlo Gavazzi' PCB-01-C-M24	Overflow alarm flasher relay	K10
DSF	1	'Critec' DSF-6A-275V	Transient safety barrier	
MOV	3	'Critec' DSD-180-415	Surge diverters	
NL	1	'Clipsal' L12A	Neutral link	NEUTRAL
NL1	1	'Clipsal' L12A	Surge filter neutral link	SURGE FILTER NEUTRAL LINK
P1	1	'NHP' RQ96E-0-500V	Voltmeter	
P2	2	'NHP' RQ96E-ACT 5A 5X 400	Ammeter Pump 1 Ammeter Pump 2	PUMP 1 PUMP 2
P3	2	'NHP' RQ48.0-240V	Hourmeter Pump 1 Hourmeter Pump 2	PUMP 1 PUMP 2
P4	1	Mann AU40043 Type LPD350 Loop Powered Display	LEVEL INDICATOR	WELL LEVEL
SS1,2	2	DANFOSS MCD3000 Soft Starter (CONTRACTOR TO) (DETERMINE SIZE)	SS	PUMP 1,2 SS

NOTES

If ventilation fan is required refer dwg 8-50144 for ventilation fan items.
If compressor is required refer dwg 8-50147 for compressor items.
Equipment ratings to be designed by contractor.
All circuit breakers to be 'Terasaki" Din-T (NOT Safe-T) – ie NO LIVE EXPOSED PARTS (terminals or exposed conductors etc.) within switch board WILL BE ALLOWED.
Circuit breaker kA ratings will be determined according to site conditions.
All miniature relays to have led indication.

ITEM	QTY	MAKE and NUMBER	DESCRIPTION	LABEL SCHEDULE
Q1	1	'Terasaki' Circuit Breaker (CONTRACTOR TO) (DETERMINE SIZE)	Main Circuit Breaker	MAIN CIRCUIT BREAKER
1Q2 2Q2	2	'Terasaki' XS SERIES (CONTRACTOR TO) c/w XFHA22 HANDLE (DETERMINE SIZE)	Circuit breaker Pump 1 Circuit breaker Pump 2	1Q2 2Q2
Q4,Q5	2	'Terasaki' DSRCB-16-30P	GPO ELCB	Q4, Q5
Q6	1	'Terasaki' DTCB-6-302C	Voltmeter 2A CB	Q6
1/2Q7	2	'Terasaki' DDTCB-6-106C	Control CB Pump 1 Control CB Pump 2	1Q7 2Q7
Q8	1	'Terasaki' DTCB-6-110C	High level alarm	Q8
Q9	1	'Terasaki' DTCB-6-110C	Telemetry CB	Q9
Q11	1	'Terasaki' DTCB-6-106C (CONTRACTOR TO) (DETERMINE SIZE)	Common control CB	Q11
Q12	1	'Terasaki' DTCB-6-106C	Flowmeter	Q12
–	1	'Terasaki' CD250-24/18-3U	Din-T Circuit Breaker Chassis	
1/2Q13	6	'Terasaki' DTCB-6-106C	Phase monitor relay C/B Pump 1 Phase monitor relay C/B Pump 2	1Q13 2Q13
Q15	1	'Terasaki' DTCB-6-110C	Surge reduction filter and 240/24V transformer fuse	Q15
Q19	1	'Terasaki' DTCB-6-110C	Switchroom Lighting CB	Q19
S1	1	'Elektra' VN V2-20P with heading 'Voltmeter'	Voltmeter selector switch	
S2	2	'Kraus & Naimer CA10-A270-FT2- engraved 'Auto-Off-On'	Mode selector switch Pump 1 Mode selector switch Pump 2	1S2 2S2
1S4 2S4	2	'Sprecher & Schuh' D5P-F607W3LX10	Reset pushbutton Pump 1 Reset pushbutton Pump 2	FAULT FAULT
S5	1	'Clipsal' Cat. No. 30m, 70/1 Mounting block	'Program keys' Lock Switch	PROG KEYS LOCK SW
1S5 2S5	2	'Clipsal' Cat. No. 30m, 70/1 Mounting block	'Setup select' Lock Switch Pump 1 'Setup select' Lock Switch Pump 2	SETUP SELECT LOCK SW PUMP 1 SETUP SELECT LOCK SW PUMP 2
1T2 2T2	2	'Sprecher & Schuh' D5P-F607W3LX10	Current Transformer Pump 1 Current transformer Pump 2	1T1 2T1
X3	1	'HPM' 787	240V outlet	240V OUTLET
–	2	Vegawell Type 71 Hydrostatic Pressure Transducer 0 to 10M Range (HART)	Hydrostatic Pressure Transducer	–
SI-1	1	Mann AU92862 Signal Isolator Type UTX/SCI 24V dc powered	Signal isolator	SI-1
SI-2	1	Mann AU92864 Signal Isolator Type UTX/SCI 240V ac powered	Signal isolator	SI-2
–	1	ABB	Flowmeter	–
–	5	'Selectix' 1107SCC05 (Chrome-padlock type (13mm Hasp))	Vandal-proof lock	–
	5	2107-9526 (3 point cam)		
	10	Rodadapt (adapter)		
	5	Rod-600R (Round rods with rollers)		

Revisions	Appd	Date
A General Amendments		2/2005
Original Issue		4/2000

Mayor _____
C.E.O. _____
Date _____

Director Assets & Infrastructure _____
Drawn | D.R.C. | Rec.
Checked | Approved
Disc.

Pine Rivers Shire Council
220 Gympie Road
Strathpine
PO Box 5070
Queensland 4500

PINE RIVERS

NOTE:– DRAWINGS ARE SUBJECT TO BE REVISED WITHOUT NOTICE. IT IS THE CONTRACTOR'S RESPONSIBILITY TO BASE WORK ON LATEST REVISIONS OF THE PINE RIVERS SHIRE COUNCIL STANDARD DRAWINGS.

I:\ELECMECH\SSTN\STD-DWGS\50-100kW\

SEWERAGE PUMP STATION
STANDARD INSTALLATION 50kW & UP
EQUIPMENT SCHEDULE
DWG 2 OF 6 DWG SET

File NO | Min Page
Standard Drawing NO
8 | 50121
A

CONSTRUCTION – Cubicle.

Cubicle to be of 3.15mm Aluminium sheet – folded, fully welded at joints and stiffened where required to form a rigid, weather, drip and vermin proof pole mounting enclosure. Neoprene door seals to be retained by use of metal framing. Three louvres (each louvre comprising of seven slots minimum 65mm wide) to be fitted to each side of the cubicle– one pair to the termination zone, one pair to the auto–transformer section and one pair near the top of cubicle. Louvres to be backed with stainless steel gauze. See 8–50103 sec B–B. One legend card holder to be fitted to inside of door 1. One drawing holder, 300mm wide, 250mm high and 25mm deep to be fitted to inside of door 1. A 3mm thick PVC gland plate to be supplied for 165mm dia. cut–out in base of cubicle. One stainless steel fuse receptacle to be fitted to cubicle. Hand lamp bracket to be fitted to inside of door 2. Two angles with holes 20mm dia. for mounting and lifting to be fitted to top and bottom of cubicle. Equipment chassis to be of 3mm thick aluminium. Meter panel to be 6mm thick laminated pheonelic resin. Provide a stainless steel mesh guard for flashing warning lamp on top of cubicle (12g. S.S. x 25mm weave).

PAINTWORK/FINISH – Cubicle.

Prior to Powder Coating grind smooth all welds, descale and degrease. Powder Coat Mist Green to external sides of switch board.

PAINTWORK/FINISH – Equipment Chassis.

Prior to Powder Coating grind smooth all welds, descale and degrease. Powder Coat White to Equipment Chasis & Internal sides of switch board.

HINGES – Doors 1 & 2.

Lowe & Fletcher CP lift off Type KIS (fixed with 316 s.s. fasteners).

HINGES – Hinged Panels.

Stainless steel full strength piano hinge (fixed with 316 s.s. fasteners).

HANDLES – Doors 1 & 2.

Selectrix 1107SCC05 Chrome Vandal–Proof Handles – Padlock type with 1107–U6 3 point cam, 1000–U49 adapter and round rods with rollers.

LOCKS – Doors 1 & 2.

Selectrix Vandal–proof Handles shall be made secure with standard issue P.R.S.C. padlocks.

LOCKS – Hinged Panels.

EMKA 1000–U45 housing with 1000–U142 slotted insert and 1000–25 Tongue and Seal.

WIRING.

All wiring to be in PVC 600V Grade with multistranded copper conductors with a minimum of 10 AMP rating.
Instrumentation wiring to be 0.5mm^2 minimum. Control wiring to be tinned copper conductors minimum of 1.5mm^2 colour coded and numbered at each end and terminated by use of metal ferrules or pin crimp lugs.
Power wiring to be 2.5mm^2 minimum phase colour coded as shown below.

COLOUR CODE.

A, B and C Phase wiring	– red, white & blue
Voltmeter and CT connections	– red, white, blue & black
240V control active (controlled by isolator on the board)	– white
Thermistors and no volt contacts	– orange
240V neutral	– black
ELV AC active	– brown
ELV AC common	– grey
Telemetry (Digital I/O)	– violet (Internal)
Telemetry (Analog I/O)	– black & white Dacron (Field)
Earth	– green–yellow

LABELS – Internal equipments.

All labels to be W–B–W (except R–W–R main C/B and warning labels) Traffolyte inscribed as shown in label schedule. See 8–50101. Main switch label's letter size to be 8mm, compartment labels' letter size to be 6mm and remainder labels' letter size to be 3mm. All labels to be secured with M3 metal threads. Inscription for label A shall be :–" Thermistors – Do Not Test Above 2.5V "
(Fit label A adjacent to pump terminals. See 8–50103).

SIGN – External self–adhesive plastic sign.

A standard P.R.S.C. issue, self–adhesive white light reflecting label, see Detail, worded – "Pine Rivers Shire Council – Pine Water" and "Sewerage Pump Station" in black letters (followed by the Pine Water Logo in the colours required by Pine Water), then "SEWERAGE PUMP STATION" "WHEN LIGHT FLASHES" "PLEASE CALL" "3480 6666" in red letters should be fixed to the cubicle. The (500W x 400H) label shall be located to face the most appropriate thoroughfare accessing the Sewage Pump Station and NOT necessarily be on the door as shown in the Detail. For pole mounted cubicles the label shall be to one side of the pole – preferably the side nearest the accessing thoroughfare.

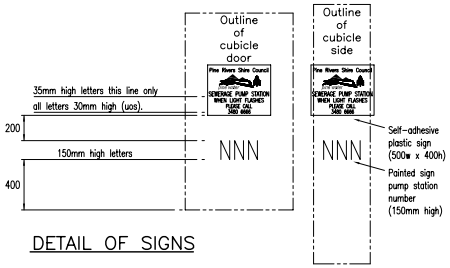

DETAIL OF SIGNS

Sign – External painted sign.

A painted label, in black matt paint, depicting the Sewerage Pump Station number in 150mm high letters (of an approved font and shown in the detail as 'NNN') shall be located beneath the self–adhesive label.

DOOR STAYS – Door 1 & Hinged Panel.

"EMKA" Wind–stop stays shall be provided for DOOR 1 and the hinged panel. Door 1 shall be held open at an angle of 120° and the hinged panel at an angle of no less than 90°. See also standard drawing 8–50103.

COWLES – Sewer Well Ventilation Fan Cowles.

Provide (hot dipped galvanised steel) ventilation fan cowles which would offer suitable protection and adequate air flow. For details see standard drawing No. 8–50014

POLE – Ventilation/Mounting Pole and Mains Supply.

Provide (hot dipped galvanised steel) sewer–ventilation/cubicle–mounting pole and suitable stainlss steel pole mounting straps for pump station cubicle. For pole details refer to P.R.S.C. standard drawing Nos. 8–50050, 8–50051, 8–50052 and 8–50053. See also details at right.

CABLE SUPPORT – Inside well Pump cable supports.

Pump cables inside well shall be supported by means of "NYLON" cable stockings such as:– " L.B. Wire Ropes' " Type 'C' flat lace–up stocking with double eye – or approved equivelent. Each set of cables shall be supported by seperate support stockings. See Detail at right.

NOTES:

1. Unless noted otherwise, steelwork shall be hot dip galvanised after fabrication.
2. All bolts and washers shall be Grade 316 stainless steel. All nuts shall be Grade 304 stainless steel.
3. 32mm conduit for up to 11kW (4.0 mm^2) and 40mm for 11–22kW (16 mm^2) installations.

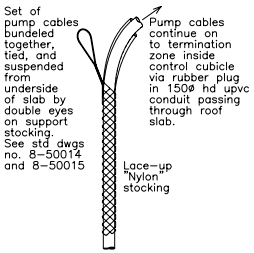

CABLE SUPPORT
(LACE–UP STOCKING
ONE PER PUMP CABLE
INSIDE WELL)

NOTE:–
FOR CUBICLE DETAILS
SEE DRAWING 8–50123

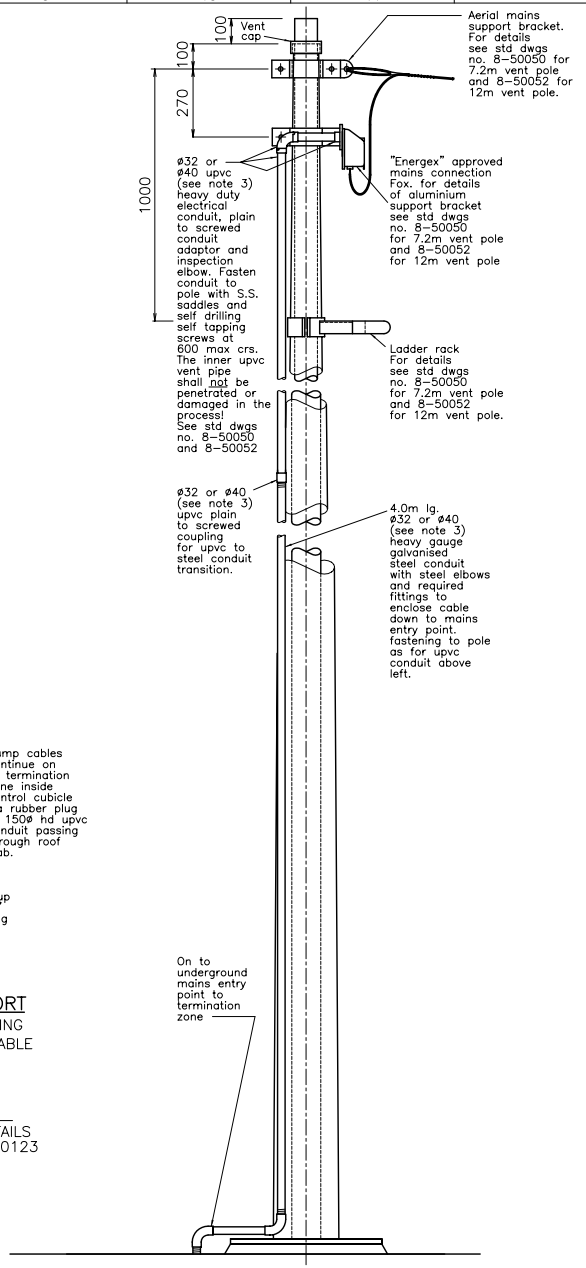

VENT POLE AND SUPPLY MAINS DETAILS

Revisions	Appd	Date
A General Amendments		2/2005
Original Issue		4/2000

Mayor _____
C.E.O. _____
Date _____

Director Assets & Infrastructure _____
Drawn | D.R.C. | Rec.
Checked | Approved
Disc.

Pine Rivers Shire Council
220 Gympie Road
Strathpine
PO Box 5070
Queensland 4500

PINE RIVERS

NOTE:– DRAWINGS ARE SUBJECT TO BE REVISED WITHOUT NOTICE. IT IS THE CONTRACTOR'S RESPONSIBILITY TO BASE WORK ON LATEST REVISIONS OF THE PINE RIVERS SHIRE COUNCIL STANDARD DRAWINGS.

I:\ELECMECH\SSTN\STD–DWGS\50–100kW\

SEWERAGE PUMP STATION
STANDARD INSTALLATION 50kW & UP
CUBICLE CONSTRUCTION SCHEDULE
DWG 3 OF 6 DWG SET

File NO | Min Page
Standard Drawing NO
8 | 50122 | A

CONSTRUCTION NOTES:-

- MATERIAL – 3.15mm marine grade aluminium.
- 75mm plinth 6mm marine grade aluminium.
- All external joints to be tig welded, ground flush & filled to prevent corrosion.
- Three point locking on doors.
- All hinges, locks and hardware to be Grade 316 stainless steel.
- Refer to P.R.S.C. standards and specifications for door seal construction.
- Door stays to hold doors open at 120 degrees
- Door bracing on each door arranged as drawing pockets – 3mm aluminium.
- 6mm aluminium gland plates 500mm x 300mm on top.
- 'Neoprene' gaskets retained by 1.6mm marine grade aluminium.
- Incoming cables enter at top left hand side gland plate.
- Pumps cables enter at top gland plate and are clipped inside cubicle to terminals at bottom of each Pump Section.
- Door louvres fitted with stainless steel wire gauze 1.5mm square openings retained by aluminium strips welded to cubicle internally.
- Store handlamp on hooks inside lower LHS door D4.

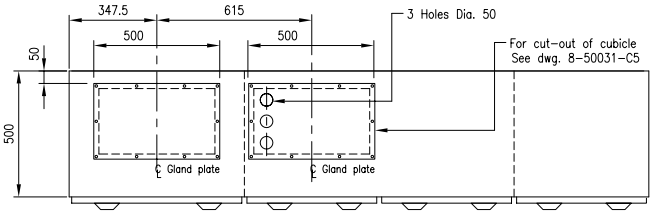

PLAN VIEW

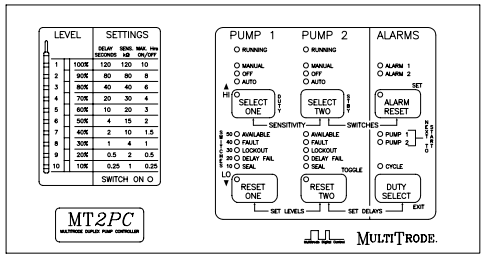

K8 MULTITRODE MT2PC

DISPLAY PANEL MOUNTED ON DOOR OF CUBICLE
CONTROLLER PROPPER MOUNTED ON GEAR TRAY

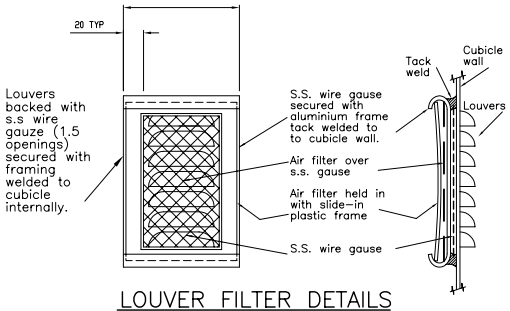

LOUVER FILTER DETAILS

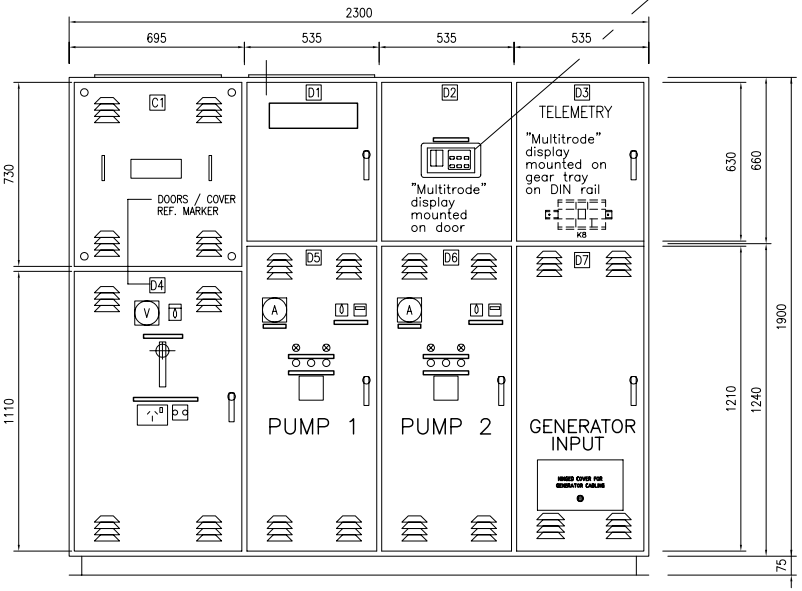

FRONT VIEW

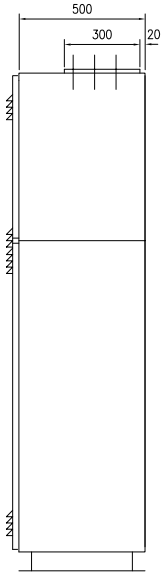

SIDE VIEW

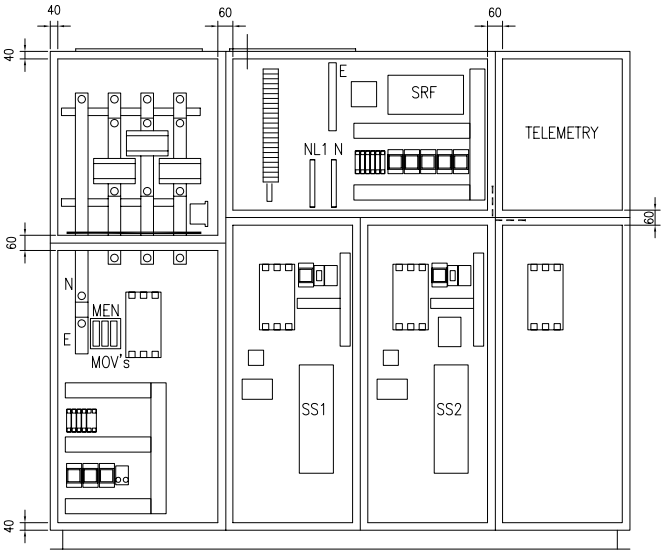

FRONT VIEW

SHOWN WITHOUT DOORS

GENERAL ARRANGEMENT OF SWITCHBOARD CUBICLE

SWITCHBOARD CUBICLE (INDOOR) SHOWN AS AN EXAMPLE ONLY – DESIGNS
FOR SPECIFIC PUMP STATIONS SHOULD BE SUBMITTED FOR APPROVAL

NOTE

DETAILS TO BE DESIGNED BY CONTRACTOR
EACH PUMP TO HAVE ITS OWN CONTROL COMPARTMENT

Revisions	Appd	Date
A General Amendments		2/2005
Original Issue		4/2000

Mayor _____
C.E.O. _____
Date _____

Director Assets & Infrastructure _____
Drawn | D.R.C. | Rec.
Checked | Approved
Disc.

Pine Rivers Shire Council
220 Gympie Road
Strathpine
PO Box 5070
Queensland 4500

PINE RIVERS

NOTE:- DRAWINGS ARE SUBJECT TO BE REVISED WITHOUT NOTICE. IT IS THE CONTRACTOR'S RESPONSIBILITY TO BASE WORK ON LATEST REVISIONS OF THE PINE RIVERS SHIRE COUNCIL STANDARD DRAWINGS.

I:\ELECMECH\SSTN\STD-DWGS\50-100kW\

SEWERAGE PUMP STATION
STANDARD INSTALLATION 50kW & UP
CUBICLE CONSTRUCTION DETAILS
DWG 4 OF 6 DWG SET

File NO | Min Page
Standard Drawing NO
8 | 50123 | A

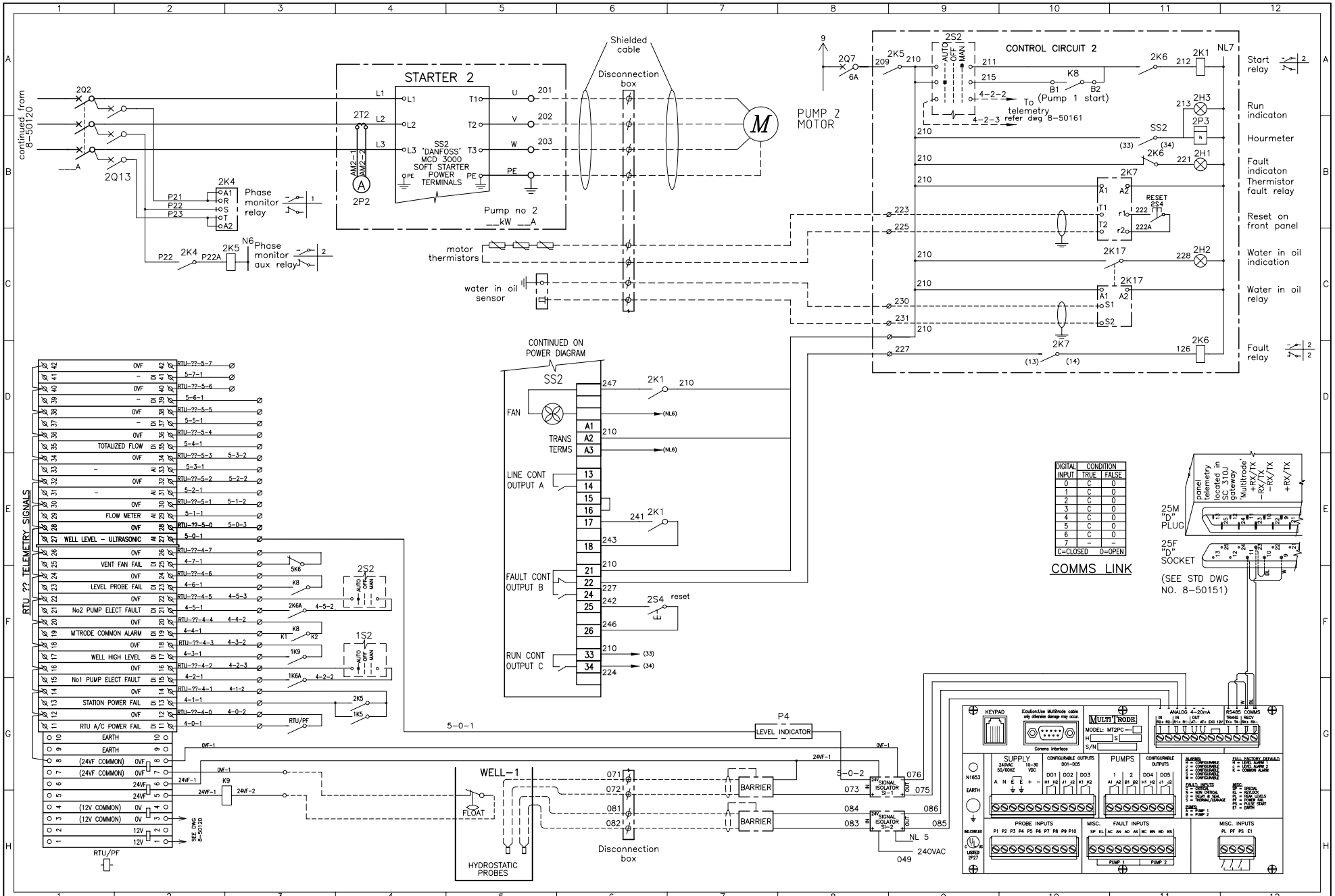

Revisions	Appd	Date
Original Issue		4/2000

Mayor _____
C.E.O. _____
Date _____

Director Assets & Infrastructure _____
Drawn | D.R.C. | Rec.
Checked | Approved
Disc.

Pine Rivers Shire Council
220 Gympie Road
Strathpine
PO Box 5070
Queensland 4500

PINE RIVERS

NOTE:- DRAWINGS ARE SUBJECT TO BE REVISED WITHOUT NOTICE. IT IS THE CONTRACTOR'S RESPONSIBILITY TO BASE WORK ON LATEST REVISIONS OF THE PINE RIVERS SHIRE COUNCIL STANDARD DRAWINGS.

I:\ELECMECH\SSTN\STD-DWGS\50-100kw

SEWERAGE PUMP STATION
STD. INST. 50kW AND UP S.S
PUMP 2 WIRING DIAGRAM
DWG 5 OF 6 DWG SET

File NO | Min Page
Standard Drawing NO
8 | 50124

CONSTRUCTION

CUBICLE MATERIAL - 3mm THICK MARINE GRADE ALUMINIUM
FIXINGS - ALL FIXINGS SHALL BE 316 GRADE STAINLESS STEEL
WELDING - FULLY WELDED AND STIFFENED TO PREVENT WARPING AND FOR A RIGID ENCLOSURE
DOOR SEALING - ADHESIVE BACKED NEOPRENE RETAINED BY METAL FRAMING
DOOR HINGES - CHROME PLATED LIFT OFF TYPE
DOOR LOCK - SELECTRIX 1107-SS05 PADLOCKABLE SWING HANDLE
ACCESS COVER FIXING - CHROME PLATED ACORN HEAD BOLTS WITH FIBRE WASHERS AND 'D' HANDLES
DOOR OPENING - 120 DEG. FITTED WITH DROP STAY
SHROUDING - IP20 WITH CLEAR PERSPEX COVERS OVER MOTOR POWER TERMINALS
VENTILATION - FIT ONE LOUVRE TO EACH SIDE TOWARDS FRONT AS SHOWN WITH MESH GAUZE AND REMOVABLE FILTER MATERIAL
PAINTING - DESCALE AND DEGREASE, NATURAL FINISH

EQUIPMENT

12	50mm HIGH BUSBAR BOBBINS	MOTOR TERMINALS
6	SPRECHER & SCHUH V7-W4	CONTROL TERMINALS
2	SPRECHER & SCHUH V7-EB3	END PLATE
2	SPRECHER & SCHUH V7-WG4	EARTH TERMINALS
1	CLIPSAL 56C315	1 PHASE OUTLET
1	CLIPSAL 56C520	3 PHASE OUTLET
1	SELECTRIX 1107-SS05	SWING HANDLE

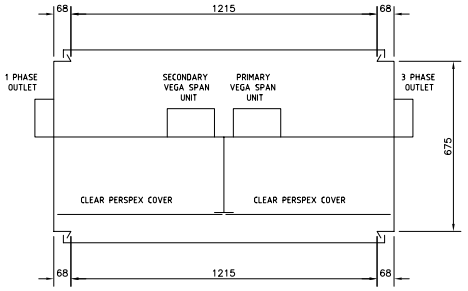

SECTION

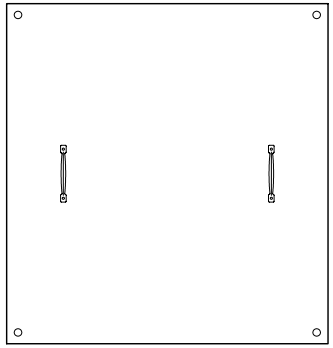

REAR ACCESS COVER

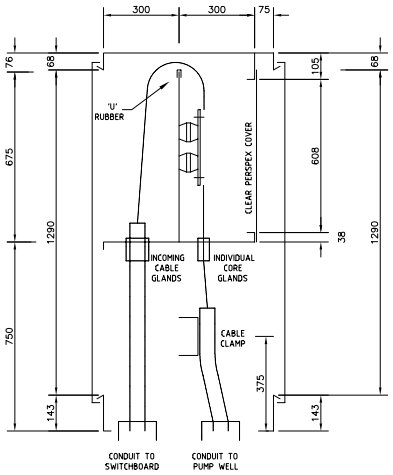

ELEVATION

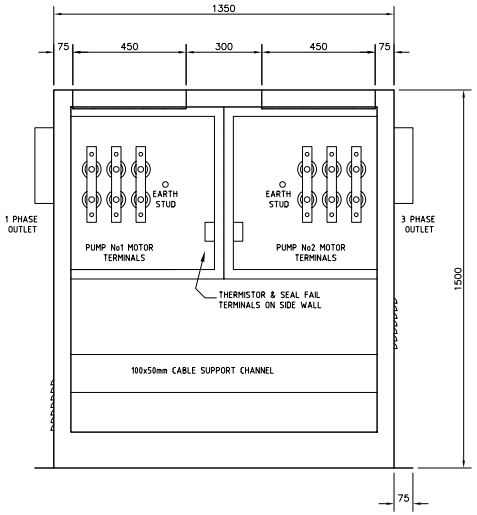

FRONT VIEW OF CUBICLE

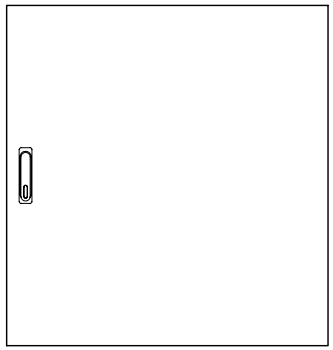

FRONT DOOR

Revisions	Appd	Date
Original Issue		2/2006

Mayor _____
C.E.O. _____
Date _____

Director Assets & Infrastructure _____
Drawn | D.R.C. | Rec.
Checked | Approved
Disc.

Pine Rivers Shire Council
220 Gympie Road
Strathpine
PO Box 5070
Queensland 4500

PINE RIVERS

NOTE:- DRAWINGS ARE SUBJECT TO BE REVISED WITHOUT NOTICE. IT IS THE CONTRACTOR'S RESPONSIBILITY TO BASE WORK ON LATEST REVISIONS OF THE PINE RIVERS SHIRE COUNCIL STANDARD DRAWINGS.

I:\ELECMECH\SSTN\STD-DWGS\50-100kwVFD

SEWERAGE PUMP STATION
STD. INST. 50kW AND UP
DISCONNECTION BOX DETAILS
DWG 6 OF 6 DWG SET

File NO | Min Page
Standard Drawing NO
8 | 50125

Road edge guide post. Paint "U/G ELECTRICITY" in black on yellow background, in series D capitals (AS1744) 50 high on both sides of post. Painting as specified for road edge guide posts.

DETAIL OF SIGN

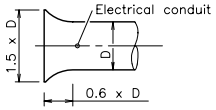

TYPICAL FLARED END

NOTES

1. Place U/G ELECTRICITY sign adjacent to the pit as directed by the Superintendent
2. Grade conduits through pits – provide drainage pipe, complete with approved flap valve, from lowest pit as directed by the Superintendent.
3. All conduit entries and exits shall be flared to prevent stripping of insulation. Refer detail.
4. Covers in Trafficable areas to be Class D, Non–Trafficable areas Class C to AS 3996.
5. Cover to be placed parallel to adjacent structures as directed by the Superintendent.
6. Mild steel covers and frames shall be hot dip galvanised.
7. Cover shall be installed in accordance with the manufacture's instructions. In particular the cover and frame shall be strapped together and wedged tight before concreting in place with fine aggregate concrete
8. Where multiple layers of conduits are required, space conduits as shown on the electrical conduit schedules or as specified in the Job Specification with a 75 MIN bedding thickness.
9. Reinforcing bars to AS 4671. Reinforcement cover 50mm MIN.

NOTE:
* Clear opening dimensions – may vary to suit type of cover provided

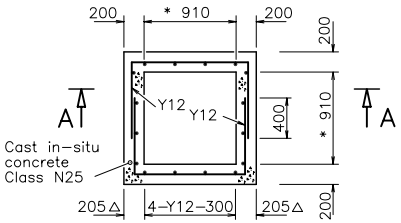

SECTIONAL PLAN
(COVERS NOT SHOWN)

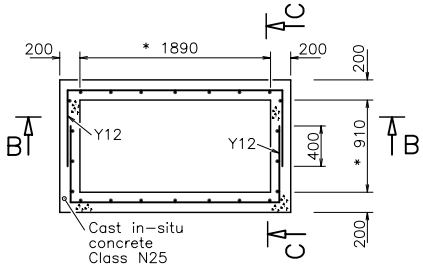

SECTIONAL PLAN
(COVERS NOT SHOWN)

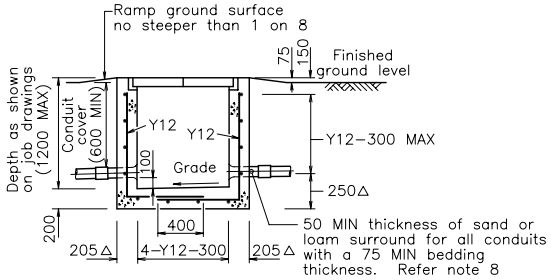

SECTION A–A

TYPE 1

△ = dimension to reinforcement

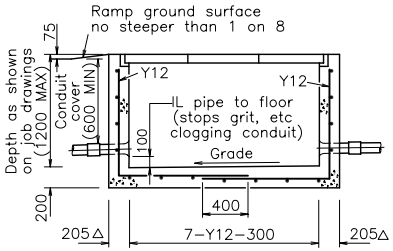

SECTION B–B

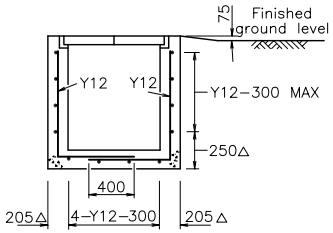

SECTION C–C

TYPE 2

Revisions	Appd.	Date
A Note 9 and concrete class changed		2/–5
Original Issue		09/96

Mayor _____
C.E.O. _____
Date _____

Director Assets & Infrastructure
Drawn | Rec.
Checked | Approved
Disc.

Pine Rivers Shire Council
220 Gympie Road
Strathpine
PO Box 5070
Queensland 4500

PINE RIVERS

ELECTRICAL CONDUIT PITS
TYPES 1 AND 2

File No. 400/26 | Min Page
Standard Drawing No.
8 | 50140 | A

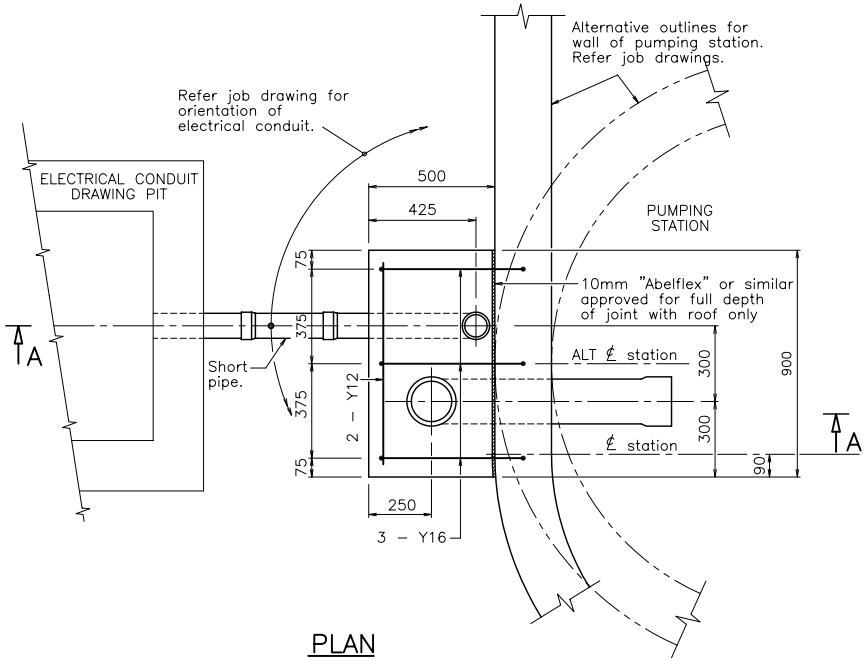

PLAN

ROOF OF PUMPING STATION NOT SHOWN

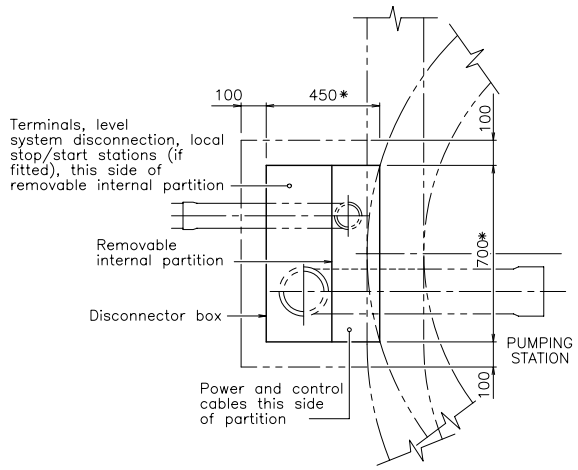

PLAN SHOWING DISCONNECTOR BOX

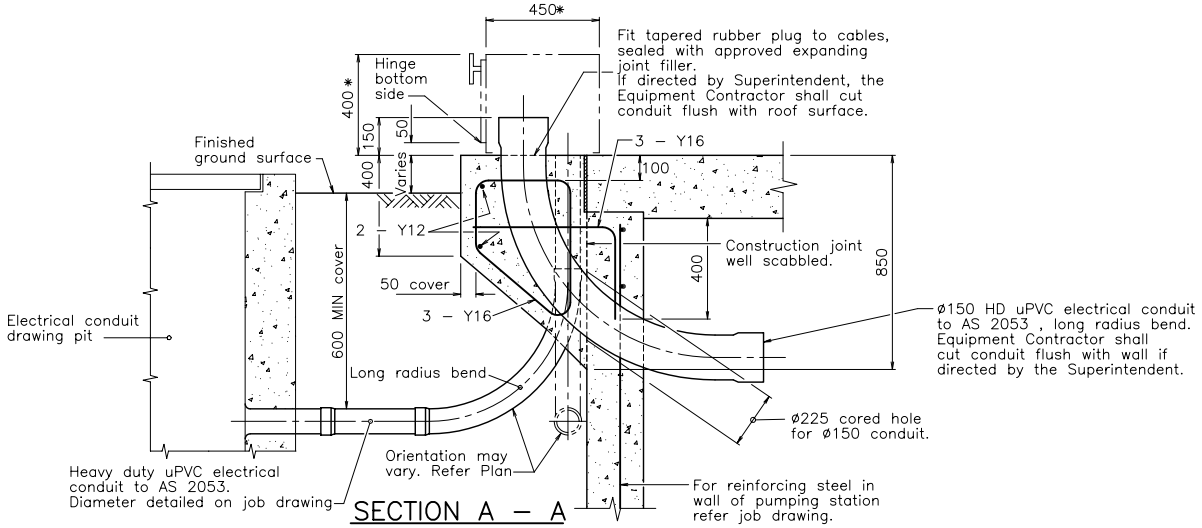

SECTION A – A

NOTE

Dimensions shown thus * are minimum dimensions only and shall be confirmed by the Equipment Contractor

Revisions	Appd	Date
Original Issue		09/96

Mayor _____

C.E.O. _____

Date _____

Director Works and Services

Drawn | Rec. | Checked | Approved | Disc.

Pine Rivers Shire Council
220 Gympie Road
Strathpine
PO Box 5070
Queensland 4500

PINE RIVERS

SUBMERSIBLE SEWAGE PUMPING STATION

DISCONNECTOR BOX AND BASE

File No. 400/26

Min Page

Standard Drawing No. 8 50141

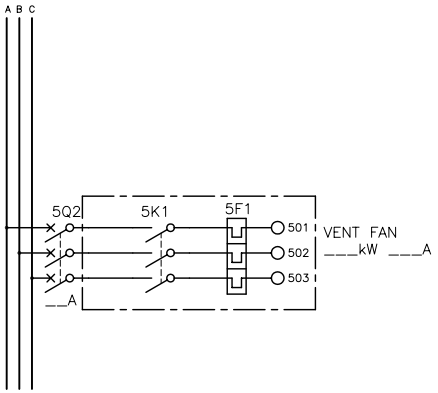

ITEM	QTY	MAKE and NUMBER	DESCRIPTION	LABEL
5F1	1	SPRECHER & SCHUH CT7-24-0.6	THERMAL O/L FOR VENT FAN	5F1
5H2	1	SPRECHER & SCHUH D5P-P53RL7 c/w Ba9s-l3-130V-2.4W	FAULT INDICATOR VENTILATION FAN	FAN FAULT
5K1	1	SGS CA7-9-10-240VAC	VENT FAN CONTACTOR	5K1
5K6	1	FINDER 55.34.0054 C/W 94.74 BASE	FAULT RELAY VENT FAN	5K6
5KT3	1	GRASSLIN 472	24 h TIME CLOCK VENT FAN	5KT3
5Q2	1	TERASAKI DTCB63__C	VENTILATION FAN 3 POLE __A CB	5Q2
5Q7	1	TERASAKI DTCB6106C	VENT FAN CONT 1 POLE 6A CB	5Q7
5S7	1	ELEKTRA B2N S04-20- LABEL OFF-ON-PUMP-TIME	VENTILATION FAN TIME CLOCK BY PASS SWITCH	5S7
Q13	1	TERASAKI DTCB6110C	FLOWMETER 1 POLE 6A CB	Q13

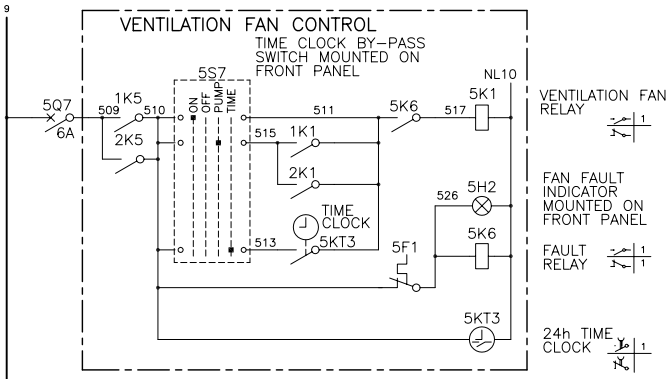

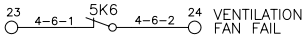

TELEMETRY SIGNALS

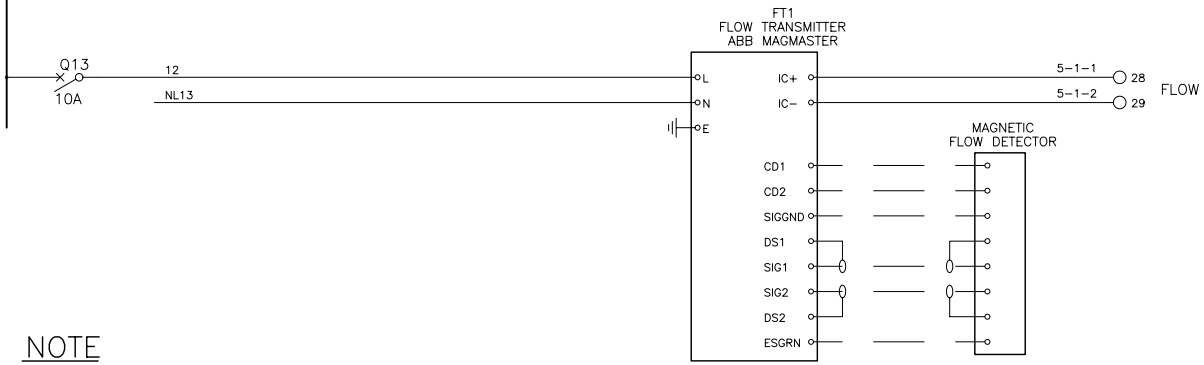

NOTE

EQUIPMENT RATINGS TO BE DESIGNED BY CONTRACTOR.
ALL MINIATURE RELAYS TO HAVE LED INDICATION.

Revisions	Appd	Date
Original Issue		2/2005

Director Assets & Infrastructure _____
Drawn | D.R.C. | Rec.
Checked | Approved
Disc.

Pine Rivers Shire Council
220 Gympie Road
Strathpine
PO Box 5070
Queensland 4500

PINE RIVERS

NOTE:- DRAWINGS ARE SUBJECT TO BE REVISED WITHOUT NOTICE. IT IS THE CONTRACTOR'S RESPONSIBILITY TO BASE WORK ON LATEST REVISIONS OF THE PINE RIVERS SHIRE COUNCIL STANDARD DRAWINGS.
CAD File Path :- I:\ELECMECH\SSTN\STD-DWGSWORKING\VENTFAN\

SEWERAGE PUMP STATION
OPTIONAL VENT FAN / FLOWMETER INST.
SCHEMATIC WIRING DIAGRAM
DWG 1 OF 1 DWG SET

File NO | Min Page
Standard Drawing NO
8 | 50144

FROM DRAWING No

8-50100

8-50110

8-50120

8-50170

ITEM	QTY	MAKE and NUMBER	DESCRIPTION	LABEL
3F1	1	SPRECHER & SCHUH CT3-12 TO CT3-42A	THERMAL O/L FOR STARTER	3F1
3H2	1	SPRECHER & SCHUH DL3R-Y-DUL3-240V	FAULT INDICATOR	COMP. FAULT
3H3	1	SPRECHER & SCHUH DL3R-?-DUL3-240V	RUN INDICATOR	COMP. RUN
3K1	1	SPRECHER & SCHUH CA3-30-01-240V	CONTACTOR	3K1
3K12	1	SPRECHER & SCHUH RT3-M-240V	THERMISTOR FAULT RELAY	3K12
3KT3	1	WATTMASTER DIGI 32 M2	24 h TIME CLOCK	3KT3
3P2	1	NHP RQ96E-0-40/200	AMMETER	COMPRESSOR
3P3	1	NHP RQ48.0-240V	HOURMETER	COMPRESSOR
3PS1	1	TO BE DETERMINED	COMPRESSOR PRESSURE SWITCH	3PS1
Q3	1	TERASAKI DIN-T 6-106	COMPRESSOR CIRCUIT BREAKER	Q3
Q8	1	TERASAKI DIN-T 6-106	COTROL C/B 1 POLE 6A CB	Q8
3S3	1	SPRECHER & SCHUH DT3P-B-149-10	FAULT RESET PUSHBUTTON	FAULT RESET
3S5	1	TO BE DETERMINED	MODE SELECTOR SWITCH	3S5
3S6	1	ELEKTRA B1N U2-20P LABEL BY-PASS OFF ON	TIME CLOCK BY-PASS SWITCH	3S6
3SV1	1	TO BE DETERMINED	INJECTION SOLENOID	3SV1
3T2	1	IME TAS 20B 40/5	CURRENT TRANSFORMER	3T2

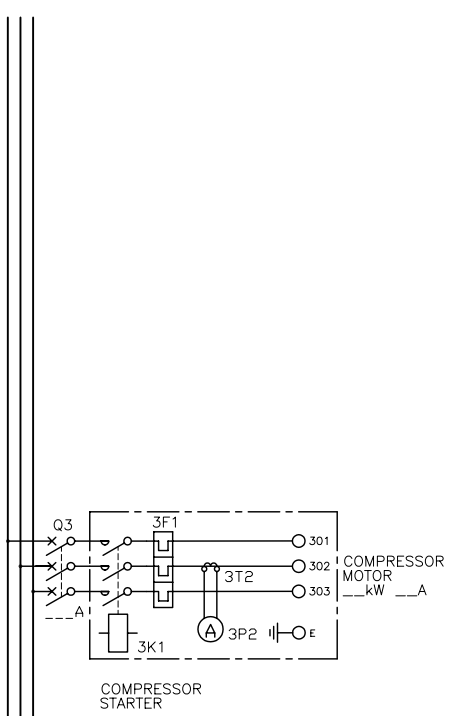

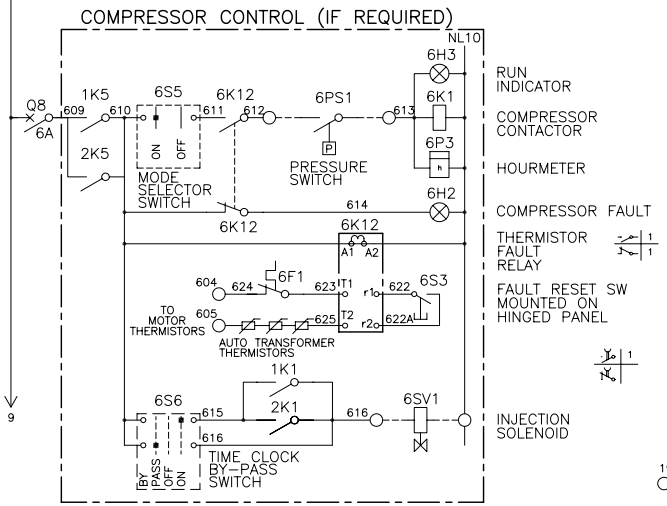

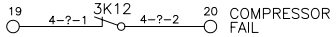

TELEMETRY SIGNALS

NOTE

EQUIPMENT RATINGS TO BE DESIGNED BY CONTRACTOR.
ALL MINIATURE RELAYS TO HAVE LED INDICATION.
REFER TO DWG 8-50100, 8-50110, 8-50120 OR 8-50170 FOR STANDARD PUMP STATION SCHEMATIC WIRING DIAGRAM.

Revisions	Appd	Date
Original Issue		2/2005

Director Assets & Infrastructure _____
Drawn | D.R.C. | Rec.
Checked | Approved
Disc.

Pine Rivers Shire Council
220 Gympie Road
Strathpine
PO Box 5070
Queensland 4500

PINE RIVERS

NOTE:- DRAWINGS ARE SUBJECT TO BE REVISED WITHOUT NOTICE. IT IS THE CONTRACTOR'S RESPONSIBILITY TO BASE WORK ON LATEST REVISIONS OF THE PINE RIVERS SHIRE COUNCIL STANDARD DRAWINGS.
CAD File Path :- I:\ELECMECH\SSTN\STD-DWGS\COMPRESS\

SEWERAGE PUMP STATION
OPTIONAL COMPRESSOR INSTALLATION
SCHEMATIC WIRING DIAGRAM
DWG 1 OF 1 DWG SET

File NO | Min Page
Standard Drawing NO
8 | 50147

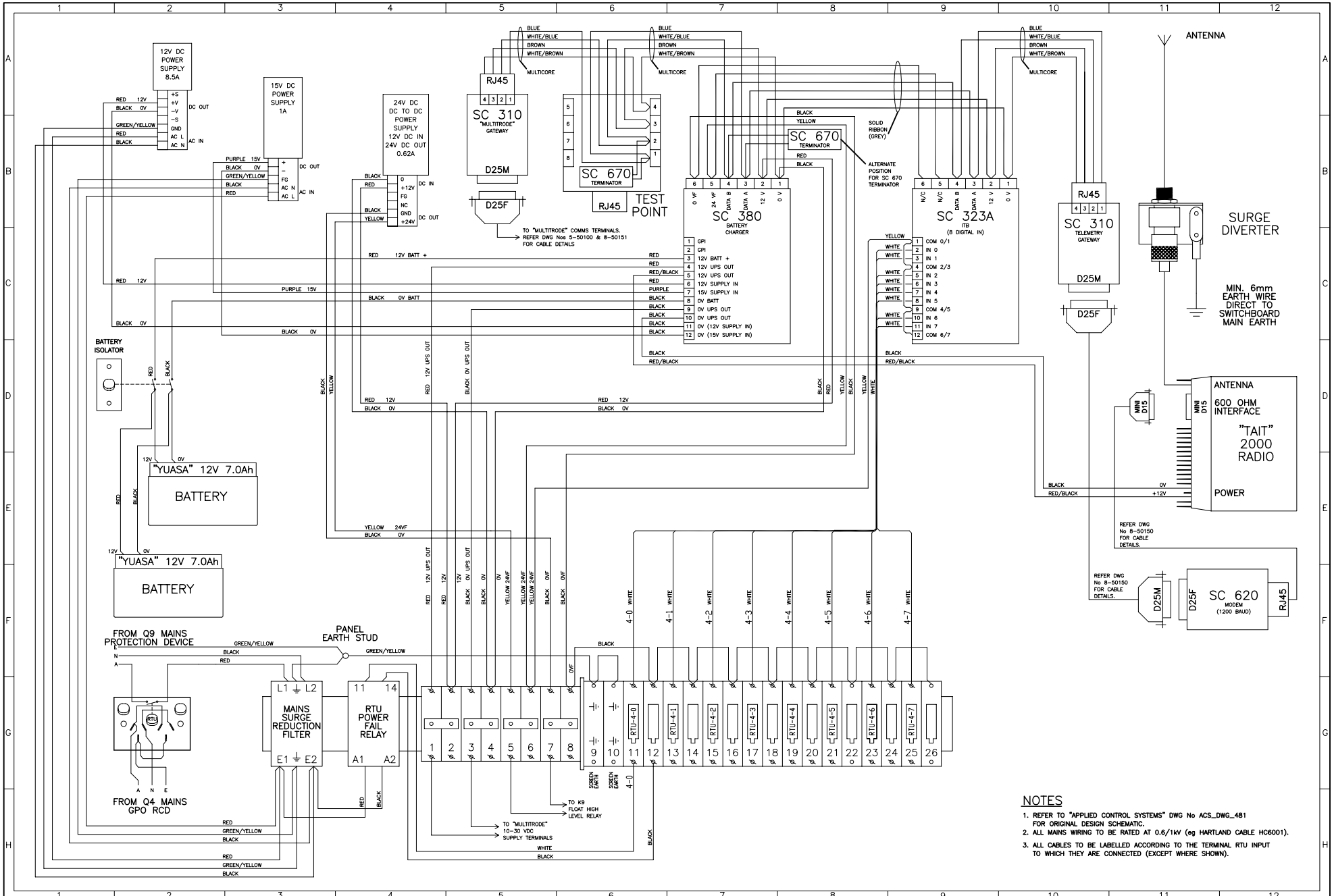

NOTES

1. REFER TO "APPLIED CONTROL SYSTEMS" DWG No ACS_DWG_481 FOR ORIGINAL DESIGN SCHEMATIC.
2. ALL MAINS WIRING TO BE RATED AT 0.6/1kV (eg HARTLAND CABLE HC6001).
3. ALL CABLES TO BE LABELLED ACCORDING TO THE TERMINAL RTU INPUT TO WHICH THEY ARE CONNECTED (EXCEPT WHERE SHOWN).

Revisions	Appd	Date
Original Issue		2/2005

Mayor _____
C.E.O. _____
Date _____

Director Assets & Infrastructure _____
Drawn | D.R.C. | Rec.
Checked | Approved
Disc.

Pine Rivers Shire Council
220 Gympie Road
Strathpine
PO Box 5070
Queensland 4500

PINE RIVERS

NOTE:- DRAWINGS ARE SUBJECT TO BE REVISED WITHOUT NOTICE. IT IS THE CONTRACTOR'S RESPONSIBILITY TO BASE WORK ON LATEST REVISIONS OF THE PINE RIVERS SHIRE COUNCIL STANDARD DRAWINGS.
CAD File Path :- I:\ELECMECH\SSTN\STD-DWGS\RADIOTEL\

SEWERAGE PUMP STATION
STANDARD PS INSTALLATION
RADIO TELEMETRY EQUIP'T LAYOUT
DWG 1 OF 1

File NO | Min Page
Standard Drawing NO
8 | 50153

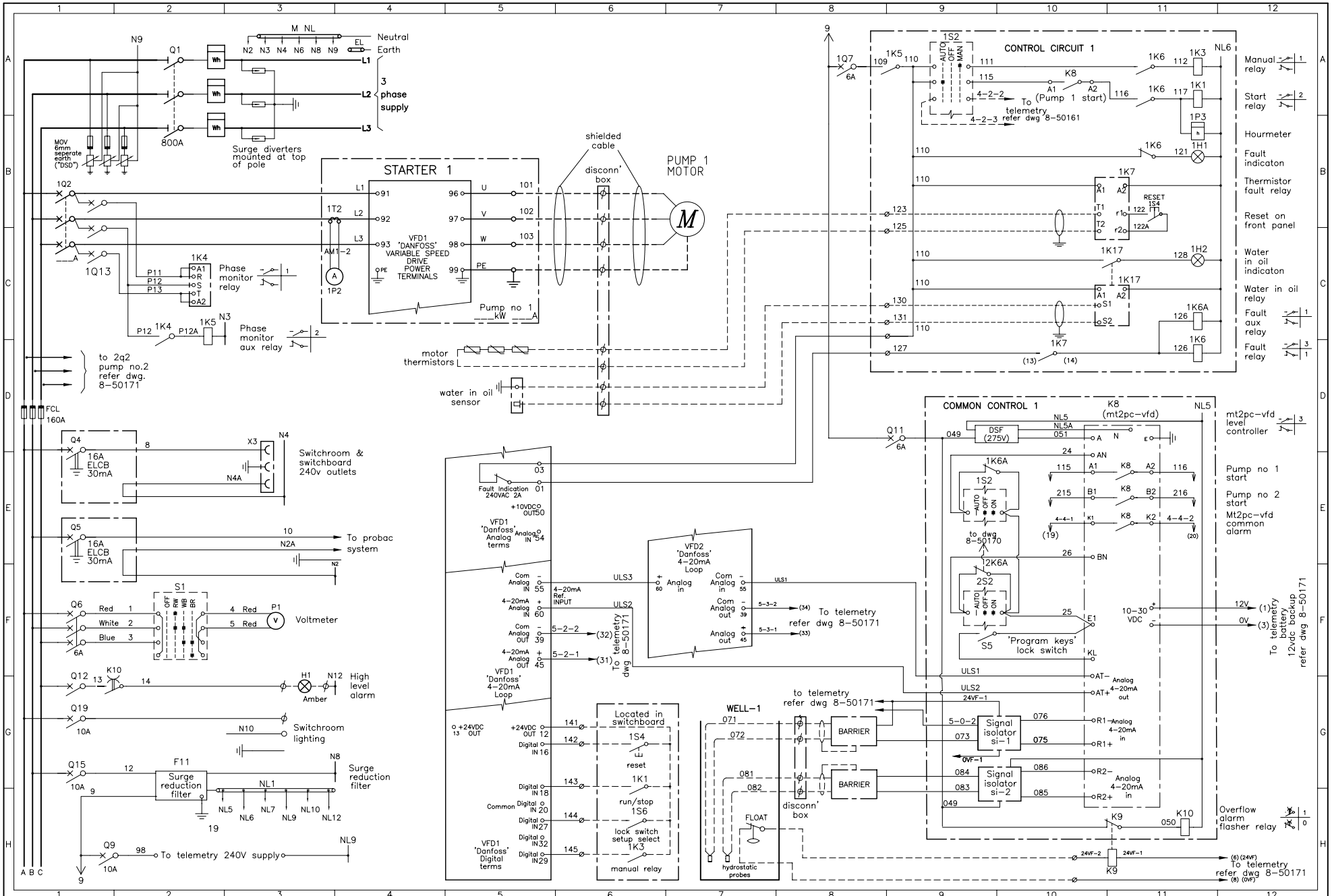

Revisions	Appd	Date
Original Issue		02/2005

Mayor _____
C.E.O. _____
Date _____

Director Assets & Infrastructure _____
Drawn | D.R.C. | Rec.
Checked | Approved
Disc.

Pine Rivers Shire Council
220 Gympie Road
Strathpine
PO Box 5070
Queensland 4500

PINE RIVERS

NOTE:- DRAWINGS ARE SUBJECT TO BE REVISED WITHOUT NOTICE. IT IS THE CONTRACTOR'S RESPONSIBILITY TO BASE WORK ON LATEST REVISIONS OF THE PINE RIVERS SHIRE COUNCIL STANDARD DRAWINGS.

I:\ELECMECH\SSTN\STD-DWGS\50-100kwVFD

SEWERAGE PUMP STATION
STD. INST. 50kW AND UP V.F.D.
SCHEMATIC WIRING DIAGRAM
DWG 1 OF 8 DWG SET

File NO | Min Page
Standard Drawing NO
8 | 50170

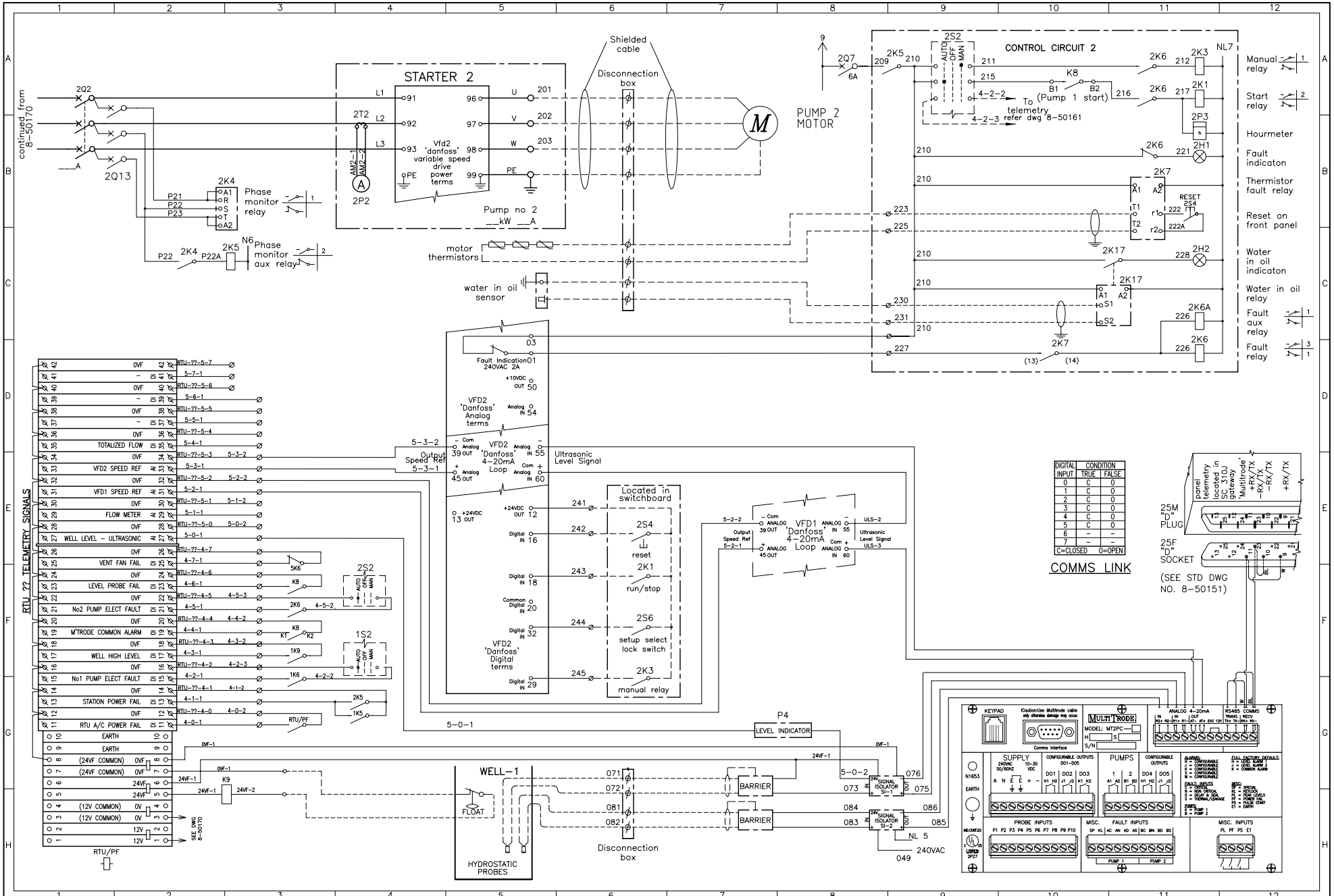

DIGITAL INPUT	CONDITION TRUE	CONDITION FALSE
0	C	O
1	C	O
2	C	O
3	C	O
4	C	O
5	C	O
6	–	–
7	–	–
C=CLOSED	O=OPEN	

Revisions	Appd	Date
Original Issue		2/2005

Mayor _____
C.E.O. _____
Date _____

Director Assets & Infrastructure _____
Drawn | D.R.C. | Rec.
Checked | Approved
Disc.

Pine Rivers Shire Council
220 Gympie Road
Strathpine
PO Box 5070
Queensland 4500

PINE RIVERS

NOTE:– DRAWINGS ARE SUBJECT TO BE REVISED WITHOUT NOTICE. IT IS THE CONTRACTOR'S RESPONSIBILITY TO BASE WORK ON LATEST REVISIONS OF THE PINE RIVERS SHIRE COUNCIL STANDARD DRAWINGS.

I:\ELECMECH\SSTN\STD-DWGS\50-100kwVFD

SEWERAGE PUMP STATION
STD. INST. 50kW AND UP V.F.D.
SCHEMATIC WIRING DIAGRAM
DWG 2 OF 8 DWG SET

File NO | Min Page
Standard Drawing NO
8 | 50171

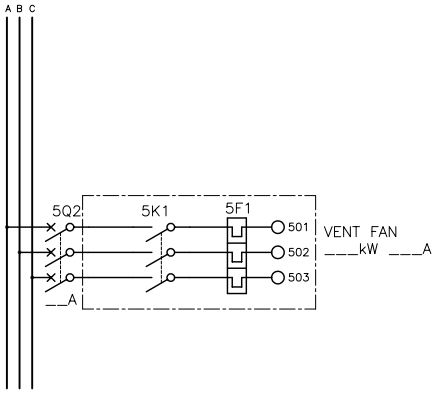

ITEM	QTY	MAKE and NUMBER	DESCRIPTION	LABEL
5F1	1	SPRECHER & SCHUH CT7-24-0.6	THERMAL O/L FOR VENT FAN	5F1
5H2	1	SPRECHER & SCHUH D5P-P53RL7 c/w Ba9s-I3-130V-2.4W	FAULT INDICATOR VENTILATION FAN	FAN FAULT
5K1	1	SGS CA7-9-10-240VAC	VENT FAN CONTACTOR	5K1
5K6	1	FINDER 55.34.0054 C/W 94.74 BASE	FAULT RELAY VENT FAN	5K6
5KT3	1	GRASSLIN 472	24 h TIME CLOCK VENT FAN	5KT3
5Q2	1	TERASAKI DTCB63__C	VENTILATION FAN 3 POLE __A CB	5Q2
5Q7	1	TERASAKI DTCB6106C	VENT FAN CONT 1 POLE 6A CB	5Q7
5S7	1	ELEKTRA B2N S04-20- LABEL OFF-ON-PUMP-TIME	VENTILATION FAN TIME CLOCK BY PASS SWITCH	5S7

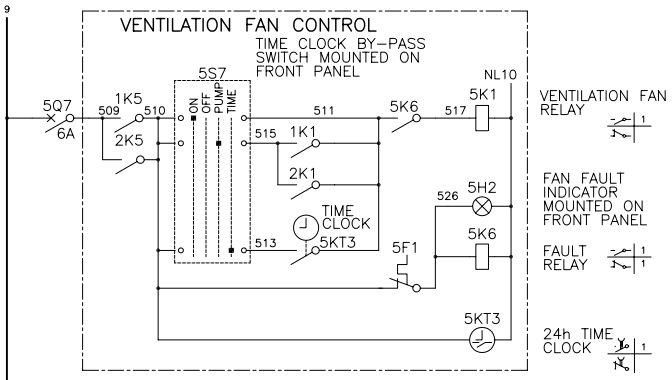

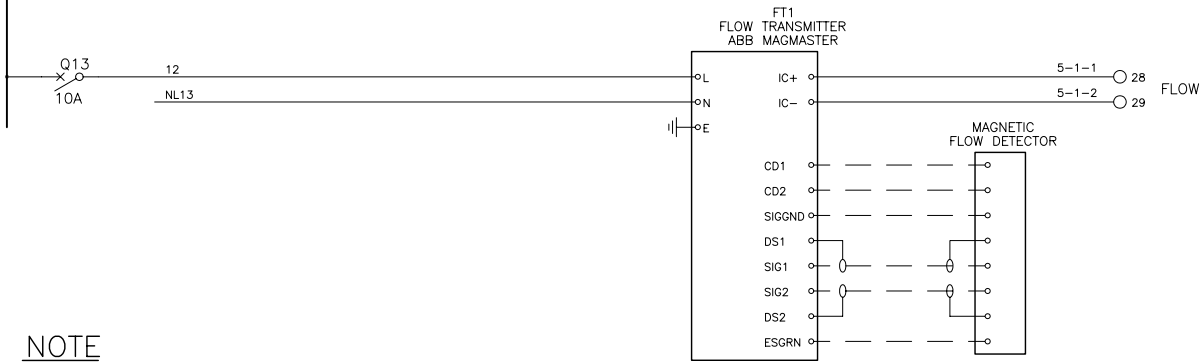

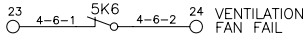

TELEMETRY SIGNALS

NOTE

EQUIPMENT RATINGS TO BE DESIGNED BY CONTRACTOR.
ALL MINIATURE RELAYS TO HAVE LED INDICATION.

Revisions	Appd	Date
Original Issue		2/2006

Mayor _____
C.E.O. _____
Date _____

Director Assets & Infrastructure _____
Drawn | D.R.C. | Rec.
Checked | Approved
Disc.

Pine Rivers Shire Council
220 Gympie Road
Strathpine
PO Box 5070
Queensland 4500

PINE RIVERS

NOTE:- DRAWINGS ARE SUBJECT TO BE REVISED WITHOUT NOTICE. IT IS THE CONTRACTOR'S RESPONSIBILITY TO BASE WORK ON LATEST REVISIONS OF THE PINE RIVERS SHIRE COUNCIL STANDARD DRAWINGS.

I:\ELECMECH\SSTN\STD-DWGS\50-100kwVFD

SEWERAGE PUMP STATION
STD. INST. 50kW AND UP V.F.D.
VENT FAN WIRING DIAGRAM
DWG 3 OF 8 DWG SET

File NO | Min Page
Standard Drawing NO
8 | 50172

ITEM	QTY	MAKE and NUMBER	DESCRIPTION	LABEL SCHEDULE
EL	1	'Clipsal' L12A	Earth link	EARTH
E1	1	'Lanson' 20W batten type fluorescent	Cubicle light	
F11	1	'Critec' DSF-10A-275V	Surge reduction filter	F11
FCL	1	NHP XLP 00 c/w N00 160 Fuse Links	Fault current limiters	FCL
FLOAT	1	'Flyght' ENM-10	Float switch	-
H1	1	'HPM' 610 amber with 100W 240V BC lamp with stainless steel mesh lamp guard	Alarm light	
1H1 2H1	2	'Sprecher & Schuh' D5P-P53RL7 c/w Ba9s-l3-130v-2.4W lamp	Fault indicator Pump 1 Fault indicator Pump 2	FAULT FAULT
1H2 2H2	2	'Sprecher & Schuh' D5P-P53RL7 c/w Ba9s-l3-130v-2.4W lamp	Water in oil indicator Pump 1 Water in oil indicator Pump 2	SEAL FAILURE SEAL FAILURE
1K1 2K1	2	'Finder' 55.34.0054 240VAC (led indication) with 94.74 bases	Start relay Pump 1 Start relay Pump 2	1K1 2K1
1K3 2K3	2	'Finder' 55.34.0054 240VAC (led indication) with 94.74 bases	Manual relay Pump 1 Manual relay Pump 2	1K3 2K3
1K4 2K4	2	'Carlo Gavazzi' DPA-01-D-M48 with 94.74 bases	Phase failure relay Pump 1 phase failure relay Pump 2	1K4 2K4
1K5 2K5	2	'Finder' 55.34.0054 240VAC (led indication) with 94.74 bases	Phase failure aux. relay Pump 1 Phase failure aux. relay Pump 2	1K5 2K5
1K6 2K6	2	'Finder' 55.34.0054 240VAC (led indication) with 94.74 bases	Fault relay Pump 1 Fault relay Pump 2	1K6 2K6
1K6A 2K6A	2	'Finder' 55.34.0054 240VAC (led indication) with 94.74 bases	Fault aux relay Pump 1 Fault aux relay Pump 2	1K6A 2K6A
1K17 2K17	2	'ATC' 78562-240VAC with 94.74 bases	Seal failure relay Pump 1 Seal failure relay Pump 2	1K17 2K17
1K7 2K7	2	RT7-E2 24-240VAC/DC	Thermistor relay Pump 1 Thermistor relay Pump 2	1K7 2K7
K8	1	'Multitrode' MT2PCVFD 2	Level controller	K8
K9	1	'Finder' 55.32.0070 24vdc (led indication) with 94.72 base	Overflow alarm relay	K9
K10	1	'Carlo Gavazzi' PCB-01-C-M24	Overflow alarm flasher relay	K10
DSF	1	'Critec' DSF-6A-275V	Transient safety barrier	
MOV	3	'Critec' DSD-180-415	Surge diverters	
NL	1	'Clipsal' L12A	Neutral link	NEUTRAL
NL1	1	'Clipsal' L12A	Surge filter neutral link	SURGE FILTER NEUTRAL LINK
P1	1	'NHP' RQ96E-0-500V	Voltmeter	
P2	2	'NHP' RQ96E-ACT 5A 5X 400	Ammeter Pump 1 Ammeter Pump 2	PUMP 1 PUMP 2
P3	2	'NHP' RQ48.0-240V	Hourmeter Pump 1 Hourmeter Pump 2	PUMP 1 PUMP 2
P4	1	Mann AU40043 Type LPD350 Loop Powered Display	LEVEL INDICATOR	WELL LEVEL
VFD1,2	2	DANFOSS VLT8000AQUA Series IP54 (CONTRACTOR TO) (DETERMINE SIZE)	VFD	PUMP 1,2 VFD

ITEM	QTY	MAKE and NUMBER	DESCRIPTION	LABEL SCHEDULE
Q1	1	'Terasaki' Circuit Breaker (CONTRACTOR TO) (DETERMINE SIZE)	Main Circuit Breaker	MAIN CIRCUIT BREAKER
1Q2 2Q2	2	'Terasaki' XS SERIES (CONTRACTOR TO) (DETERMINE SIZE) c/w XFHA22 HANDLE	Circuit breaker Pump 1 Circuit breaker Pump 2	1Q2 2Q2
Q4,Q5	2	'Terasaki' DSRCB-16-30P	GPO ELCB	Q4, Q5
Q6	1	'Terasaki' DTCB-6-302C	Voltmeter 2A CB	Q6
1/2Q7	2	'Terasaki' DDTCB-6-106C	Control CB Pump 1 Control CB Pump 2	1Q7 2Q7
Q8	1	'Terasaki' DTCB-6-110C	High level alarm	Q8
Q9	1	'Terasaki' DTCB-6-110C	Telemetry CB	Q9
Q11	1	'Terasaki' DTCB-6-106C	Common control CB	Q11
Q12	1	'Terasaki' DTCB-6-106C (CONTRACTOR TO) (DETERMINE SIZE)	Flowmeter	Q12
-	1	'Terasaki' CD250-24/18-3U	Din-T Circuit Breaker Chassis	
1/2Q13	6	'Terasaki' DTCB-6-106C	Phase monitor relay C/B Pump 1 Phase monitor relay C/B Pump 2	1Q13 2Q13
Q15	1	'Terasaki' DTCB-6-110C	Surge reduction filter and 240/24V transformer fuse	Q15
Q19	1	'Terasaki' DTCB-6-110C	Switchroom Lighting CB	Q19
S1	1	'Elektra' VN V2-20P with heading 'Voltmeter'	Voltmeter selector switch	
S2	2	'Kraus & Naimer CA10-A270-FT2- engraved 'Auto-Off-On'	Mode selector switch Pump 1 Mode selector switch Pump 2	1S2 2S2
1S4 2S4	2	'Sprecher & Schuh' D5P-F607W3LX10	Reset pushbutton Pump 1 Reset pushbutton Pump 2	FAULT FAULT
S5	1	'Clipsal' Cat. No. 30m, 70/1 Mounting block	'Program keys' Lock Switch	PROG KEYS LOCK SW
1S5 2S5	2	'Clipsal' Cat. No. 30m, 70/1 Mounting block	'Setup select' Lock Switch Pump 1 'Setup select' Lock Switch Pump 2	SETUP SELECT LOCK SW PUMP 1 SETUP SELECT LOCK SW PUMP 2
1T2 2T2	2	'Sprecher & Schuh' D5P-F607W3LX10	Current Transformer Pump 1 Current transformer Pump 2	1T1 2T1
X3	1	'HPM' 787	240V outlet	240V OUTLET
-	2	Vegawell Type 71 Hydrostatic Pressure Transducer 0 to 10M Range (HART)	Hydrostatic Pressure Transducer	-
SI-1	1	Mann AU92862 Signal Isolator Type UTX/SCI 24V dc powered	Signal isolator	SI-1
SI-2	1	Mann AU92864 Signal Isolator Type UTX/SCI 240V ac powered	Signal isolator	SI-2
-	1	ABB	Flowmeter	-
-	5	'Selectix' 1107SCC05 (Chrome-padlock type (13mm Hasp))	Vandal-proof lock	-
	5	2107-9526 (3 point cam)		
	10	Rodadapt (adapter)		
	5	Rod-600R (Round rods with rollers)		

Revisions	Appd	Date
Original Issue		2/2006

Mayor _____

C.E.O. _____

Date _____

Director Assets & Infrastructure _____

Drawn | D.R.C. | Rec.

Checked | Approved

Disc.

Pine Rivers Shire Council
220 Gympie Road
Strathpine
PO Box 5070
Queensland 4500

PINE RIVERS

NOTE:- DRAWINGS ARE SUBJECT TO BE REVISED WITHOUT NOTICE. IT IS THE CONTRACTOR'S RESPONSIBILITY TO BASE WORK ON LATEST REVISIONS OF THE PINE RIVERS SHIRE COUNCIL STANDARD DRAWINGS.

I:\ELECMECH\SSTN\STD-DWGS\50-100kwVFD

SEWERAGE PUMP STATION
STD. INST. 50kW AND UP V.F.D.
EQUIPMENT SCHEDULE

DWG 4 OF 8 DWG SET

File NO | Min Page

Standard Drawing NO

8 | 50173

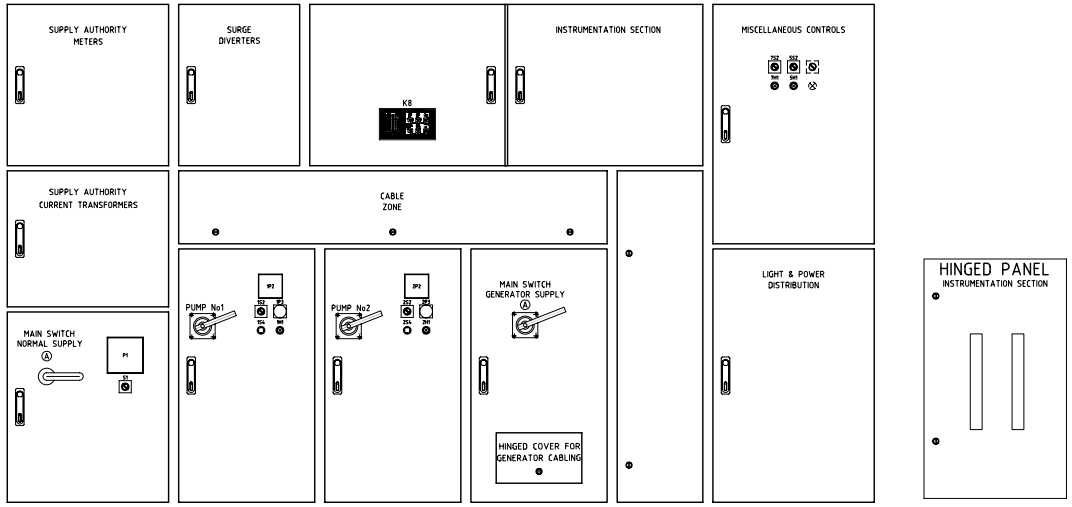

FRONT VIEW OF DOORS

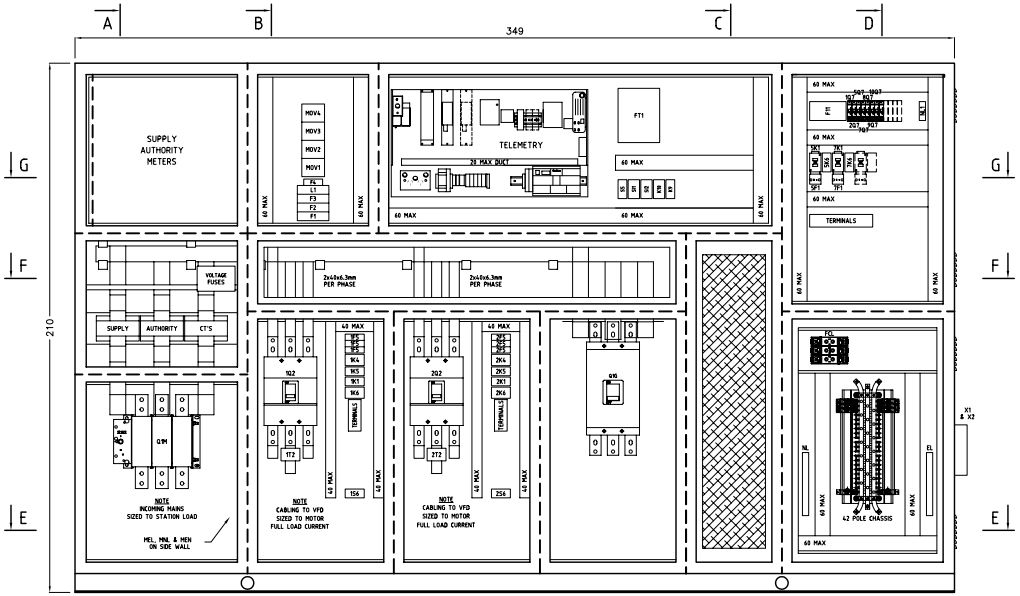

FRONT VIEW OF CUBICLE

Revisions	Appd	Date
Original Issue		2/2005

Mayor _____

C.E.O. _____

Date _____

Director Assets & Infrastructure _____

Drawn	D.R.C.	Rec.
Checked		Approved
Disc.		

Pine Rivers Shire Council
220 Gympie Road
Strathpine
PO Box 5070
Queensland 4500

PINE RIVERS

NOTE:– DRAWINGS ARE SUBJECT TO BE REVISED WITHOUT NOTICE. IT IS THE CONTRACTOR'S RESPONSIBILITY TO BASE WORK ON LATEST REVISIONS OF THE PINE RIVERS SHIRE COUNCIL STANDARD DRAWINGS.

I:\ELECMECH\SSTN\STD-DWGS\50-100kwVFD

SEWERAGE PUMP STATION
STD. INST. 50kW AND UP V.F.D. SWITCHBOARD LAYOUT
DWG 5 OF 8 DWG SET

File NO | Min Page

Standard Drawing NO

8 | 50174

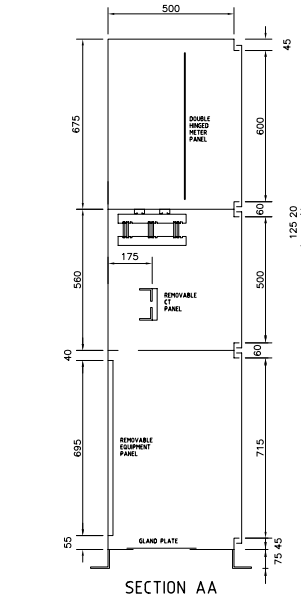

SECTION AA

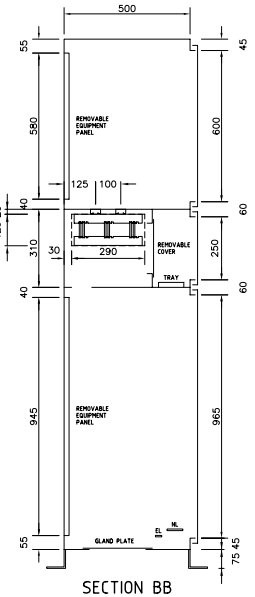

SECTION BB

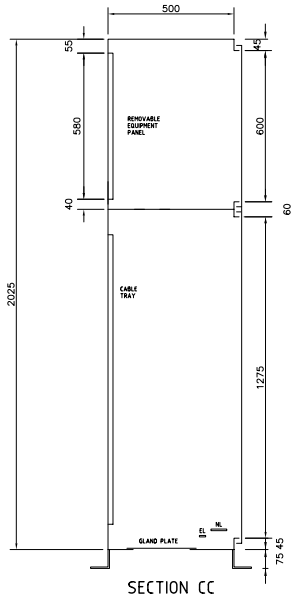

SECTION CC

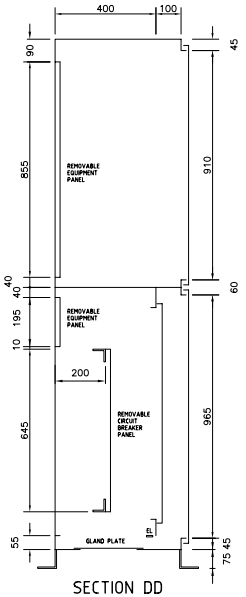

SECTION DD

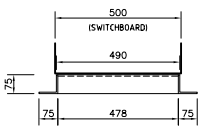

PLINTH END VIEW

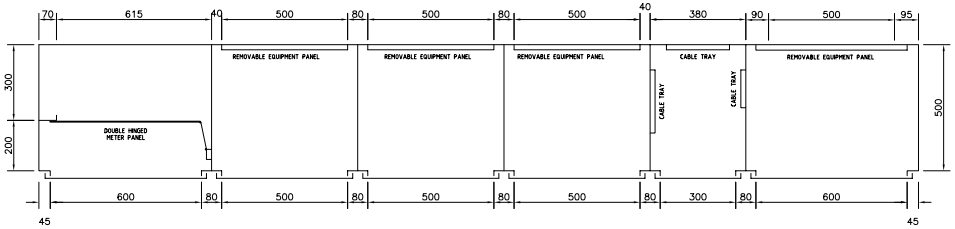

SECTION GG

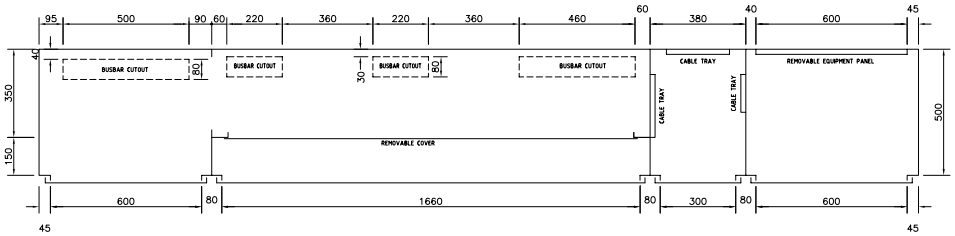

SECTION FF

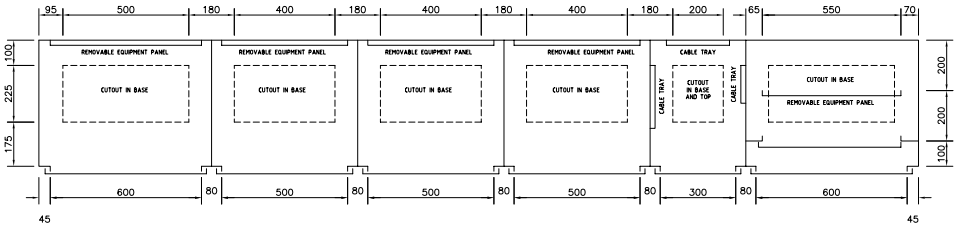

SECTION EE

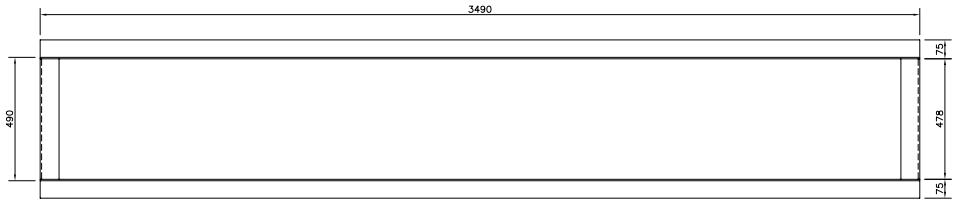

PLINTH DETAIL SECTION

Revisions	Appd	Date
Original Issue		2/2005

Mayor _____

C.E.O. _____

Date _____

Director Assets & Infrastructure _____

Drawn	D.R.C.	Rec.	
Checked		Approved	
Disc.			

Pine Rivers Shire Council
220 Gympie Road
Strathpine
PO Box 5070
Queensland 4500

PINE RIVERS

NOTE:- DRAWINGS ARE SUBJECT TO BE REVISED WITHOUT NOTICE. IT IS THE CONTRACTOR'S RESPONSIBILITY TO BASE WORK ON LATEST REVISIONS OF THE PINE RIVERS SHIRE COUNCIL STANDARD DRAWINGS.

I:\ELECMECH\SSTN\STD-DWGS\50-100kWVFD

SEWERAGE PUMP STATION
STD. INST. 50kW AND UP V.F.D. SWITCHBOARD SECTIONAL VIEWS
DWG 6 OF 8 DWG SET

File NO | Min Page

Standard Drawing NO

8 | 50175

CONSTRUCTION

CUBICLE MATERIAL - 3mm THICK MARINE GRADE ALUMINIUM
FIXINGS - ALL FIXINGS SHALL BE 316 GRADE STAINLESS STEEL
WELDING - FULLY WELDED AND STIFFENED TO PREVENT WARPING AND FOR A RIGID ENCLOSURE
DOOR SEALING - ADHESIVE BACKED NEOPRENE RETAINED BY METAL FRAMING
DOOR HINGES - CHROME PLATED LIFT OFF TYPE
DOOR LOCK - SELECTRIX 1107-SS05 PADLOCKABLE SWING HANDLE
ACCESS COVER FIXING - CHROME PLATED ACORN HEAD BOLTS WITH FIBRE WASHERS AND 'D' HANDLES
DOOR OPENING - 120 DEG. FITTED WITH DROP STAY
SHROUDING - IP20 WITH CLEAR PERSPEX COVERS OVER MOTOR POWER TERMINALS
VENTILATION - FIT ONE LOUVRE TO EACH SIDE TOWARDS FRONT AS SHOWN WITH MESH GAUZE AND REMOVABLE FILTER MATERIAL
PAINTING - DESCALE AND DEGREASE, NATURAL FINISH

EQUIPMENT

12	50mm HIGH BUSBAR BOBBINS	MOTOR TERMINALS
6	SPRECHER & SCHUH V7-W4	CONTROL TERMINALS
2	SPRECHER & SCHUH V7-EB3	END PLATE
2	SPRECHER & SCHUH V7-WG4	EARTH TERMINALS
1	CLIPSAL 56C315	1 PHASE OUTLET
1	CLIPSAL 56C520	3 PHASE OUTLET
1	SELECTRIX 1107-SS05	SWING HANDLE

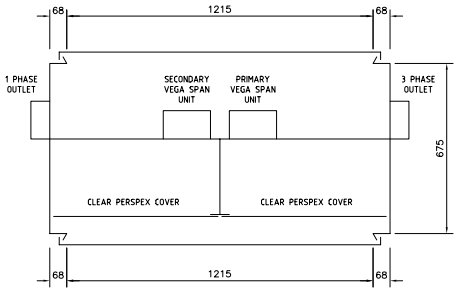

SECTION

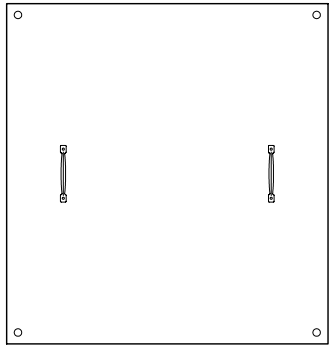

REAR ACCESS COVER

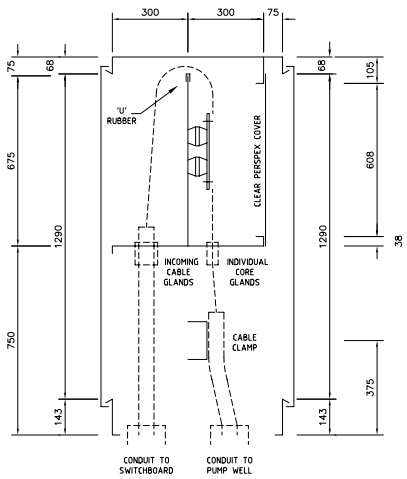

ELEVATION

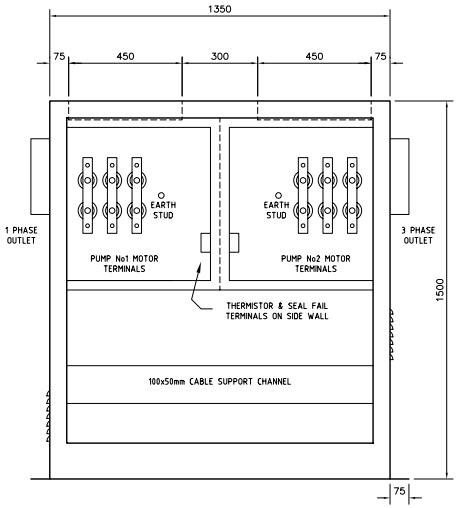

FRONT VIEW OF CUBICLE

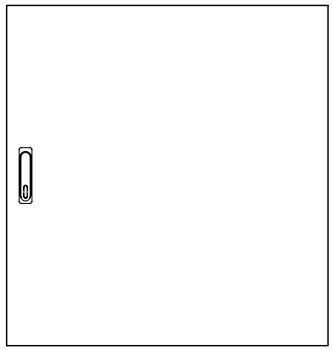

FRONT DOOR

Revisions	Appd	Date
Original Issue		2/2006

Mayor _____
C.E.O. _____
Date _____

Director Assets & Infrastructure _____
Drawn | D.R.C. | Rec.
Checked | Approved
Disc.

Pine Rivers Shire Council
220 Gympie Road
Strathpine
PO Box 5070
Queensland 4500

PINE RIVERS

NOTE:- DRAWINGS ARE SUBJECT TO BE REVISED WITHOUT NOTICE. IT IS THE CONTRACTOR'S RESPONSIBILITY TO BASE WORK ON LATEST REVISIONS OF THE PINE RIVERS SHIRE COUNCIL STANDARD DRAWINGS.

I:\ELECMECH\SSTN\STD-DWGS\50-100kwVFD

SEWERAGE PUMP STATION
STD. INST. 50kW AND UP V.F.D. DISCONNECTION BOX DETAILS
DWG 7 OF 8 DWG SET

File NO | Min Page
Standard Drawing NO
8 | 50176

NOTES:–

CONDUITS FOR INCOMMING AND OUTGOING POWER NOT SHOWN

LAYOUT FOR 2 PUMP STATION

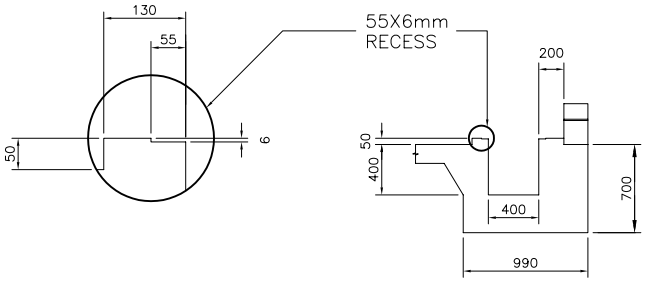

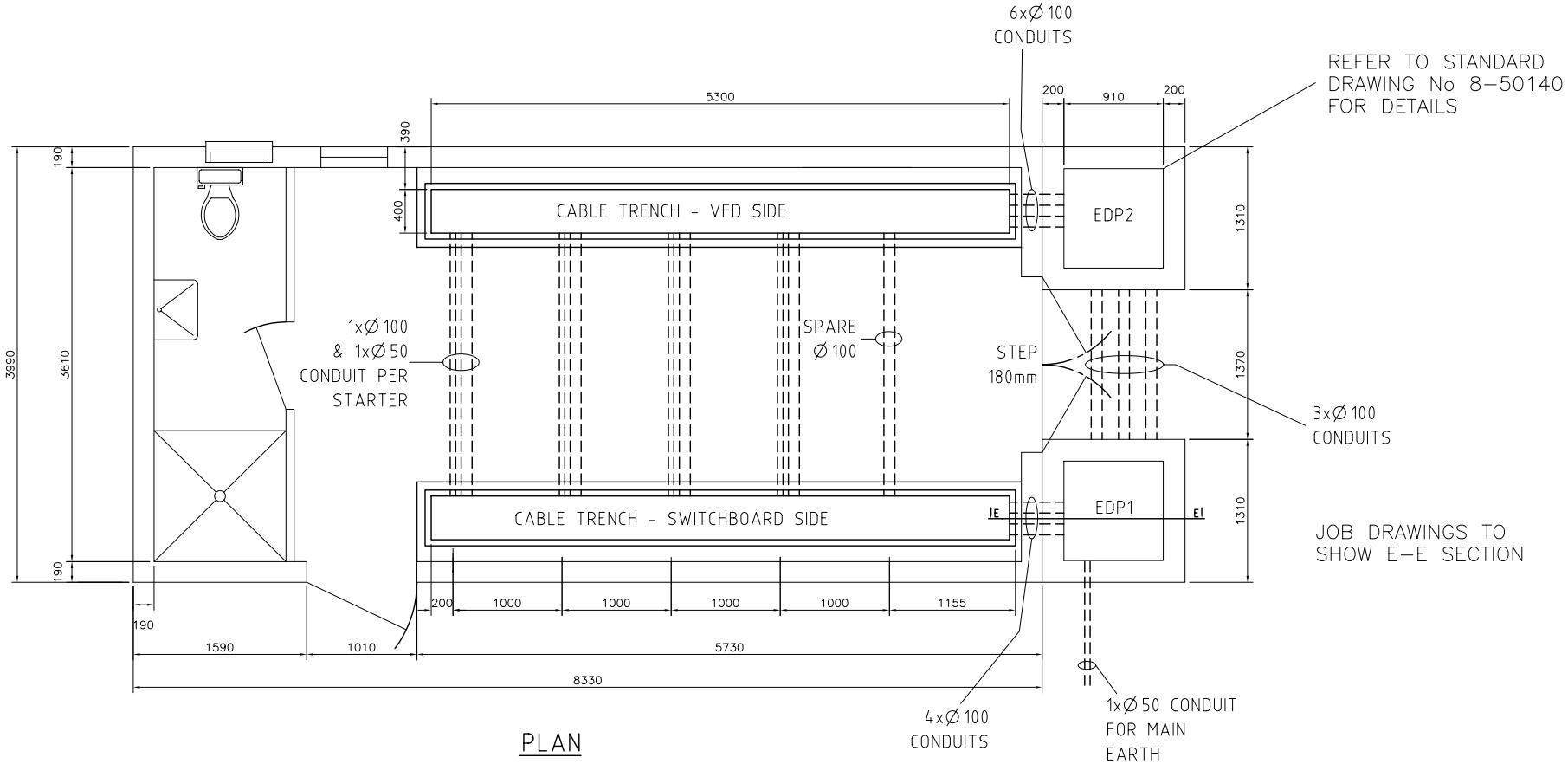

JOB DRAWINGS TO SHOW E–E SECTION

PLAN

Revisions	Appd	Date
Original Issue		2/2006

Mayor _____

C.E.O. _____

Date _____

Director Assets & Infrastructure _____

Drawn | D.R.C. | Rec.

Checked | Approved

Disc.

Pine Rivers Shire Council
220 Gympie Road
Strathpine
PO Box 5070
Queensland 4500

PINE RIVERS

NOTE:– DRAWINGS ARE SUBJECT TO BE REVISED WITHOUT NOTICE. IT IS THE CONTRACTOR'S RESPONSIBILITY TO BASE WORK ON LATEST REVISIONS OF THE PINE RIVERS SHIRE COUNCIL STANDARD DRAWINGS.

I:\ELECMECH\SSTN\STD–DWGS\50–100kwVFD

SEWERAGE PUMP STATION
STD. INST. 50kW AND UP V.F.D.
SWITCHBOARD ROOM LAYOUT
DWG 8 OF 8 DWG SET

File NO | Min Page

Standard Drawing NO

8 | 50177